SEPTEMBER 1980

HEWLETT-PACKARD JOURNAL

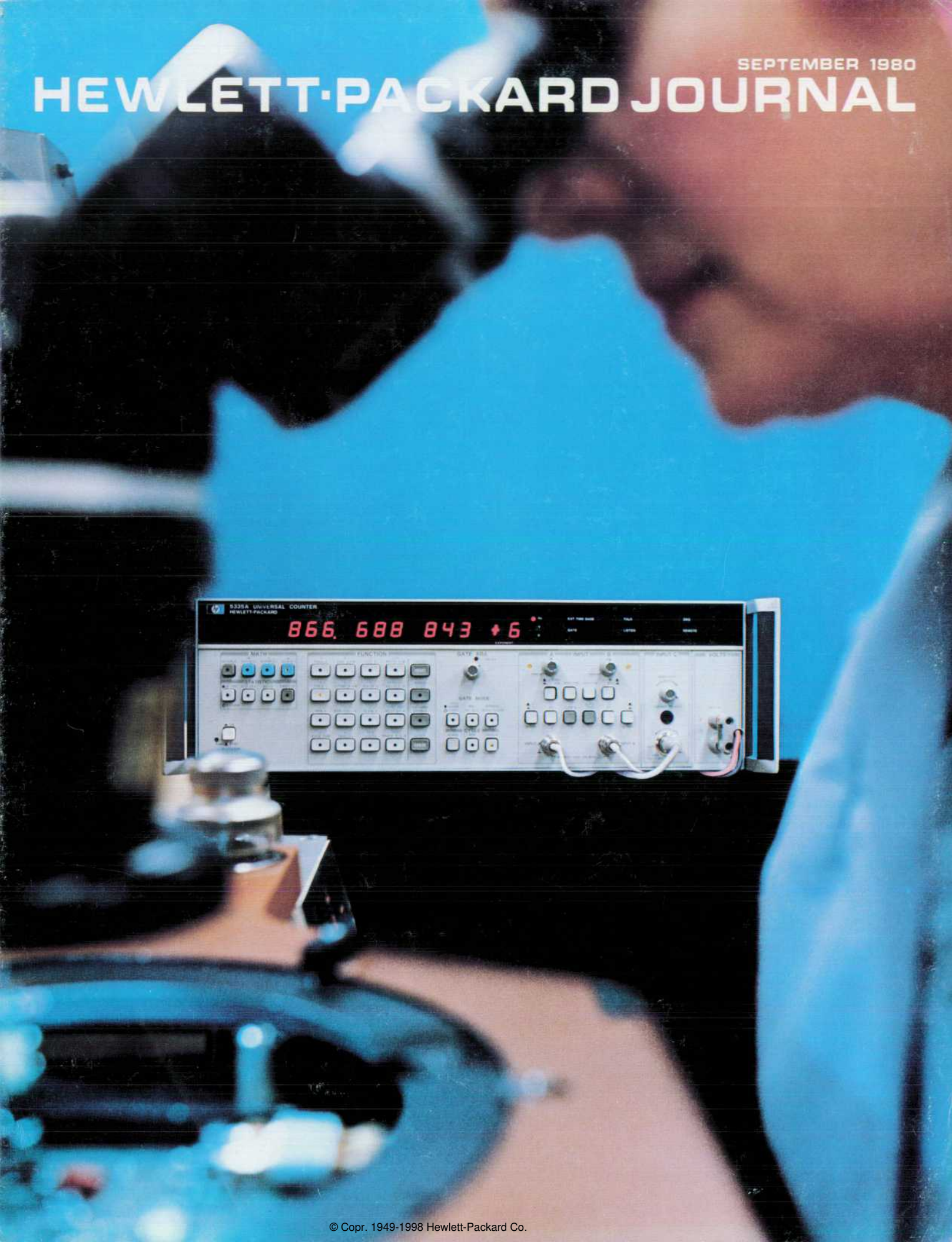

© Copr. 1949-1998 Hewlett-Packard Co.

HEWLETT-PACKARD JOURNAL
Technical Information from the Laboratories of Hewlett-Packard Company

SEPTEMBER 1980 Volume 31 • Number 9

Contents:

3 **A Fully Integrated, Microprocessor-Controlled Total Station,** *by Alfred F. Gort* *This innovative, portable, electronic instrument measures position in three dimensions with second-order accuracy.*

12 **Mechanical Design Constraints for a Total Station,** *by Ronald K. Kerschner* *Electronic position measurement accuracy isn't usable without a stable frame and bearing system.*

14 **A Compact Optical System for Portable Distance and Angle Measurements,** *by Charles E. Moore and David J. Sims* *When the same optical system has to serve as both telescope and distance-meter optics, you have a lens design challenge.*

16 **An Approach to Large-Scale Non-Contact Coordinate Measurements,** *by Douglas R. Johnson* *How do you verify that a huge airplane is properly assembled?*

18 **Interfacing the 3820A via the HP-IB,** *by Gerald F. Wasinger* *The total station can communicate with computers for further processing of distance and angle information.*

21 **Automatic Measurements with a High-Performance Universal Counter,** *by Gary D. Sasaki and Ronald C. Jensen* *Outstanding performance, high-resolution technology, and many new measurement functions distinguish this 200-MHz counter.*

24 **Third Input Extends Range to 1300 MHz,** *by David M. DiPietro* *It's a prescaler, but the mainframe's interpolators prevent loss of resolution.*

28 **A Voltmeter for a Universal Counter,** *by Val D. McOmber* *Precision voltage-to-frequency converters with software error correction provide a systems voltmeter for little added cost.*

30 **5335A Self Test and Diagnostics,** *by Robert J. LaFollette* *Built-in checks boost user confidence and make troubleshooting easy.*

In this Issue:

The universe of the universal counter keeps expanding. Not very many years ago, such counters were expected to measure frequency, frequency ratio, period, period average, and time interval. Later, voltage-to-frequency or voltage-to-time converters were offered, and universal counters began to double as digital voltmeters. Our cover subject this month, Model 5335A Universal Counter (see page 21), expands the universal counter repertoire to include phase, duty cycle, rise and fall times, slew rate, and other measurements that used to require external data manipulation and, in some cases, extra equipment.

The advanced capabilities of the 5335A come from a combination of a microcomputer and an HP-developed integrated circuit called the multiple-register counter, or MRC. One example of the synergism of this combination is the way the MRC's eight-decade count chains are extended to 20 decades with the processor's help. Counting a 100-MHz input signal, these count chains would take more than 30,000 years to overflow, so you won't find an overflow indicator on the 5335A. Another 5335A feature is high resolution, gained through a technique called interpolation. The counter's clock produces pulses every 100 nanoseconds, and without interpolation that would be the limit of its resolution. Two interpolator circuits reduce this limit to near one nanosecond by detecting precisely when the measurement begins and ends in relation to the clock pulses.

Also featured in this issue is Model 3820A Total Station (page 3), an electronic distance and angle measuring instrument. Originally developed for surveying applications, the 3820A also makes short work of other large-scale coordinate measurement problems (see page 16). Precise aircraft assembly is one example; measuring large antenna profiles is another. The 3820A's optical and angle-measuring systems represent significant contributions. It turns out that to devise an electronic system with the same accuracy as traditional optomechanical surveying instruments is not a trivial problem. Another challenge was finding a way to sense gravity accurately. These and other contributions are described in the articles on pages 3, 12, and 14.

-R. P. Dolan

Editor, Richard P. Dolan • Associate Editor, Kenneth A. Shaw • Art Director, Photographer, Arvid A. Danielson
Illustrator, Nancy S. Vanderbloom • Administrative Services, Typography, Anne S. LoPresti • European Production Manager, Dick Leeksma

©Hewlett-Packard Company 1980 Printed in U.S.A.

© Copr. 1949-1998 Hewlett-Packard Co.

A Fully Integrated, Microprocessor-Controlled Total Station

Here's a new instrument that measures angles and distances, combines these readings, and yields true three-dimensional position information.

by Alfred F. Gort

THE MEASUREMENT OF DISTANCE by electronic techniques has become well established in recent years. This technology has been combined with existing theodolites—optomechanical angle-measuring instruments—to form three-dimensional measurement systems. Fully integrated total stations that measure both distance and angle electronically have been developed by Hewlett-Packard[1] and several other companies.

The performance of the optomechanical theodolite with an optical micrometer has been difficult to match with electronic encoder systems. Until recently the encoder systems have been considerably larger than optomechanical angle measurement systems and have not reached second-order accuracy in most cases. Because of the increasing demand for speed and accuracy, more interest now exists in combining the distance and angle measuring functions into a single instrument with arc-second accuracy for angles and accuracy to several millimetres for distance.

Hewlett-Packard's answer to this need is Model 3820A Electronic Total Station, Fig. 1. To make it a reality, several new subsystems had to be developed:

- An optical system that functions as the transmitting and receiving optics for the distance meter and as the sighting telescope for the theodolite.
- An electronic angle-measuring system comparable in size and accuracy to a second-order theodolite.
- A two-axis gravity-sensing device to provide vertical index and horizontal angle correction.
- A miniaturized distance-meter module with greatly reduced power consumption and a five-kilometre range.
- An electronic system and microprocessor to control the instrument, perform necessary computations, and output data to a peripheral for recording or processing.
- A structural frame and bearing system with the stability required for a second-order theodolite.

Optical System

The layout of the optical system for the 3820A is shown in Fig. 2. A *catadioptric* telescope with a 66-mm clear aperture is used. The design provides sufficient area for the distance meter's transmitting and receiving beams in a short telescope length. Since the majority of the telescope's power is in the reflector, the system has excellent color correction and exhibits no *secondary spectrum*. The *Mangin mirror* and corrector lens form an objective that is well corrected for *spherical aberrations* and *coma* over a 1.5° field. The 30× telescope uses a *Pechan prism* to erect the image. A symmetrical eyepiece gives a sharp field at full angle and a 12-mm eye relief. The *reticle* is illuminated for night work.

The optics system acts as an eight-power *Galilean telescope* for the distance meter. The distance meter incorporates a double heterojunction GaAs lasing diode, a chopper system, and a reference path. A beam splitter is used to reflect the infrared light into the distance-meter module while transmitting the visible spectrum to the eyepiece.

Electronic Measurement and Control System

Four transducers feed measurement data to the central microprocessor. The transducers are the distance-measuring module, the horizontal-angle encoder, the vertical-angle encoder and the tilt meter. The microprocessor controls the transducers via the I/O module, which has an eight-bit control bus and an eight-bit data bus (see Fig. 3).

The two angle encoders are optically and electronically identical and each one consists of three analog interpolation circuits plus an eight-bit digital sensor. The analog signals from the angle encoders, tilt meter, and distance meter use a common phase detector. Angle, tilt, and distance interpolation are accomplished by phase measurement. The desired transducer is selected for input to the phase detector by a control gate from the I/O module.

The microprocessor is a 56-bit serial processor with a ten-bit instruction word. A masked ROM contains 4096 of these ten-bit instructions. Ten 56-bit words can be stored in the data storage chip (RAM). This RAM stores the last measurement of each function in a dedicated location.

The instrument has two identical keyboard and display units (Fig. 4), one on the front and the other on the back of the telescope mount. This was done for user convenience when taking direct and reversed telescope readings *(plunging)* for high-accuracy measurements.

Measurement data can be transmitted via a special interface, the digital-output module, to a peripheral. This interface includes two-way handshake signals and transmits via five sliprings to the fixed base. The 38001A HP-IB* Distance Meter Interface converts these signals to an HP-IB-compatible format to facilitate interfacing to data processing systems.[2]

Angle Measurement System

Angles are electronically read from a glass disc with a metal-film pattern deposited on it. Since the *zenith* angle

Note: All terms in italics in this article are defined in the glossary on page 11.

*Compatible with IEEE Standard 488-1978.

© Copr. 1949-1998 Hewlett-Packard Co.

must be an absolute value referenced to gravity, an absolute reading system was chosen instead of an incremental one. The identical system is used for both the horizontal and vertical angles.

The encoder disc used in the 3820A is shown in Fig. 5. The optical sensing system for reading this disc is illustrated in Fig. 6. The angular position on the disc is found by combining three separate measurements:

1. The instrument first measures an eight-bit *Gray-code* pattern that determines position to one part in 256. This is similar to reading the degree mark on a theodolite circle.
2. Next, the instrument interpolates a sinusoidal-track pattern of 128 cycles by dividing each cycle into 1000 parts. Thus, the circle is divided into 128,000 increments, each corresponding to an angular variation of approximately ten arc seconds.
3. Finally, the instrument interpolates the position on a track comprised of 4096 radial slits. Again, the period for each slit is subdivided into 1000 parts. This divides the circle into 4,096,000 parts, resulting in a true one-cc-grad (0.32 arc-second) resolution.

The 4096-radial-slit pattern is read at diametrically opposed points on the circle to eliminate eccentricity errors. The reading of the sinusoidal track interpolator is also corrected for the eccentricity sensed by the 4096-slit track. The microprocessor combines the readings of the three sensor systems to produce an absolute reading.

To illustrate the principle of interpolation, consider the sinusoidal track. Fig. 7a shows the track, which varies sinusoidally in width. The wavelength of the pattern is 1080 μm and the maximum amplitude is 600 μm. Four photodiodes are placed at 90° intervals with respect to the sinusoidal period. Each diode senses the collimated illumination through the pattern. The photocurrent generated depends on the illuminated area of the diode, which in turn is dependent on the diode's position with respect to the pattern.

The relationship between photocurrent and position is derived as follows (see Fig. 7b):

$$I_1 = I_0 + I\sin(\phi) \quad (1)$$
$$I_2 = I_0 + I\sin(\phi+90) = I_0 + I\cos(\phi) \quad (2)$$
$$I_3 = I_0 + I\sin(\phi+180) = I_0 - I\sin(\phi) \quad (3)$$
$$I_4 = I_0 + I\sin(\phi+270) = I_0 - I\cos(\phi) \quad (4)$$

Fig. 1. *Model 3820A Electronic Total Station. This instrument combines electronic distance and angle measurement capabilities into a compact package. The values obtained with the 3820A are accurate to a few millimetres for distances up to five kilometres and to a few arc seconds for horizontal and vertical angles.*

The illumination amplitude I is modulated as a function of time: $I(t) = I\sin(\omega t)$. Substituting into (1) through (4) and then subtracting (3) from (1) and subtracting (4) from (2) yields:

$$I_1 - I_3 = 2I\sin(\phi)\sin(\omega t) \quad (5)$$
$$I_2 - I_4 = 2I\cos(\phi)\sin(\omega t) \quad (6)$$

These two signals are processed in such a manner that $(I_1 - I_3)$ is phase-shifted 90° with respect to $(I_2 - I_4)$. The resulting signals are then summed in an operational amplifier (see block diagram, Fig. 3).

$$2I\sin(\phi)\sin(\omega t) + 90° \text{ shift} = 2I\sin(\phi)\cos(\omega t)$$
$$2I\cos(\phi)\sin(\omega t) + 0° \text{ shift} = 2I\cos(\phi)\sin(\omega t)$$
$$2I\sin(\phi)\cos(\omega t) + 2I\cos(\phi)\sin(\omega t) = 2I\sin(\omega t + \phi) \quad (7)$$

The signal (7) is compared in a phase detector with the modulating signal $\sin(\omega t)$ to determine ϕ. The phase meter has a resolution of 0.36 degrees, resulting in an interpolation of one part in 1000 for the period.

The above derivation assumes zero sensor width. However, it can be shown that the equations hold for a finite-width sensor. This is because the convolution integral of a sine function with a rectangle function is still a sine or cosine function although the amplitude is changed.

A typical error graph for the encoder system is shown in Fig. 8. Fourier analysis of the graph shows an interpolation error of 3.1 cc grad, a once-around error of 2.6 cc grad, and a twice-around error (graduation error) of 4.2 cc grad. The once-around error can be eliminated by plunging and the twice-around error may be averaged out by incrementing the circle. Overall, the total standard deviation of the error is below one arc second, making the 3820A an excellent tool for second-order measurement work.

Gravity Sensing System

Traditionally, a theodolite has been equipped with a twenty-arc-second level vial parallel to the *trunnion* axis for precise leveling and a vertical compensator to correct zenith angles for residual tilt. Precise leveling is necessary to maintain horizontal-angle accuracy for steep vertical angles. In the 3820A, the vertical compensator and trunnion-axis-plate level are combined in a two-axis tilt sensor. This device eliminates the need for precise leveling.

The system is basically a two-axis electronic *autocol-*

© Copr. 1949-1998 Hewlett-Packard Co.

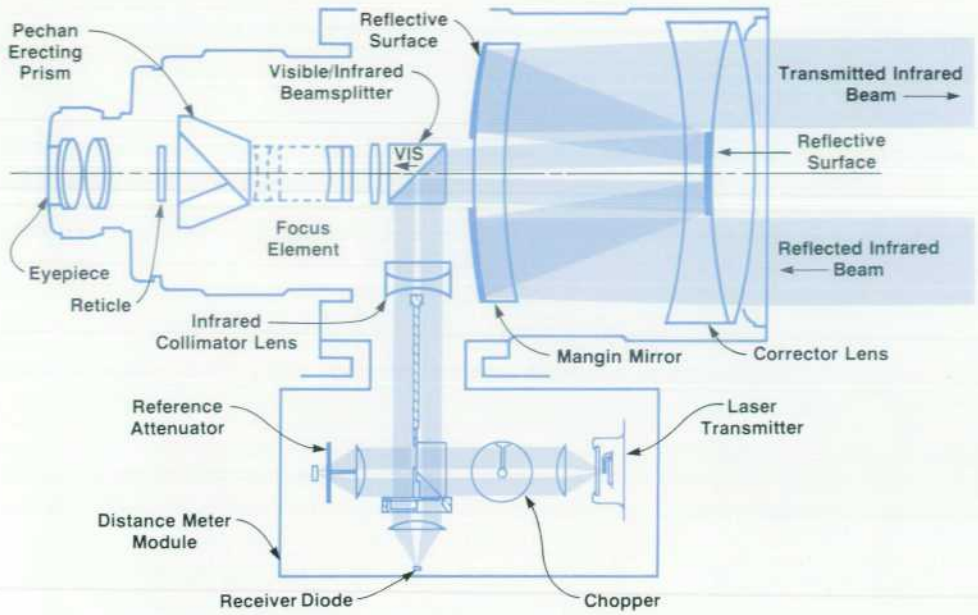

Fig. 2. *The 3820A optical system uses a compact telescope design for target sighting. An infrared laser distance measurement system shares the use of the primary optical elements.*

limator. Fig. 9 shows the optical layout of the tilt sensor. A mercury pool damped with silicone oil is used to establish the vertical reference. The surface of the mercury pool serves as a reflector that is always perpendicular to the direction of gravity. The enclosure consists of an anti-reflection-coated optical flat joined to a metal cup. This arrangement accommodates thermal expansion. The three-element illuminator lens provides highly uniform illumination of the transparent sinusoidal slits (Fig. 10). A negative lens, a positive lens, and the mercury reflector form the imaging system. The effective focal length of the system is 163 mm.

To determine the level within one cc grad, the pattern position is read to 0.7 μm accuracy. The interpolation technique is the same as used for angle measurement. Two combinations of a transparent sinusoidal slit and its four photodiode sensors are arranged orthogonally for the two axes. To prevent erroneous readings when the interpolators exceed their range, a limit sensor is incorporated. When in range, the limit sensor remains illuminated. If the range is exceeded, the limit sensor is no longer illuminated, and a display indicator flashes to inform the operator. Cross-axis

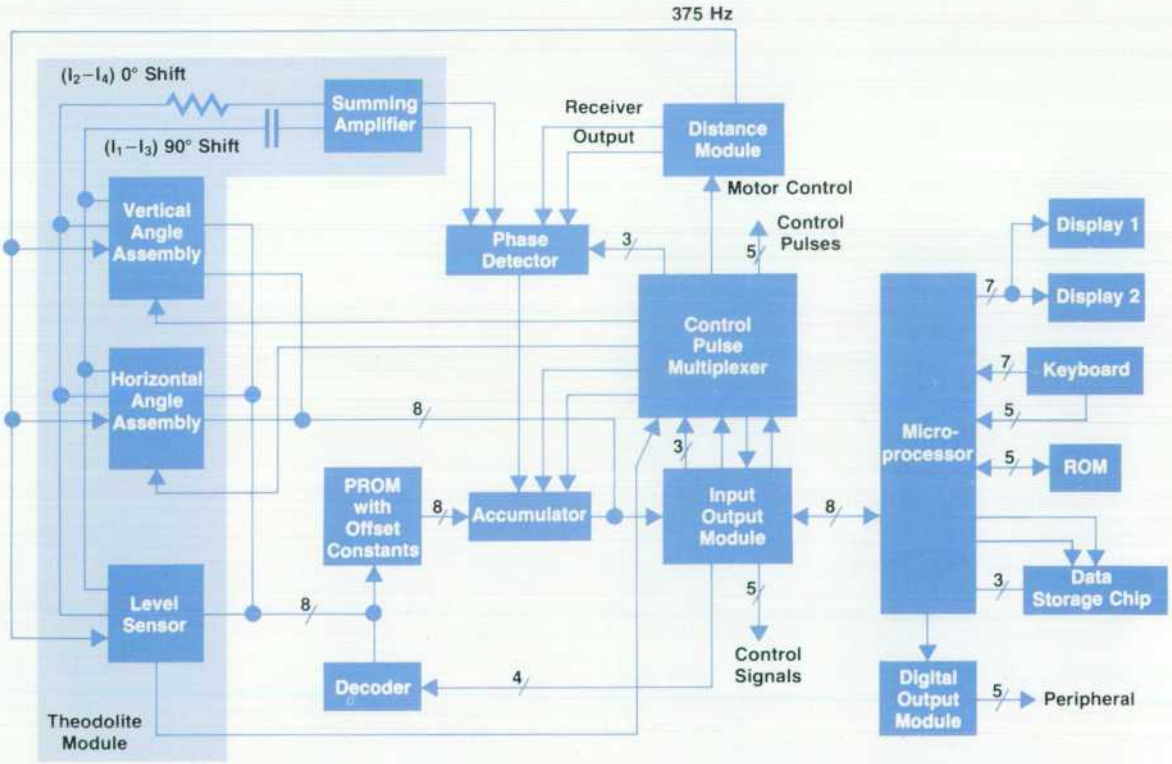

Fig. 3. *Electronic block diagram for 3820A Electronic Total Station.*

© Copr. 1949-1998 Hewlett-Packard Co.

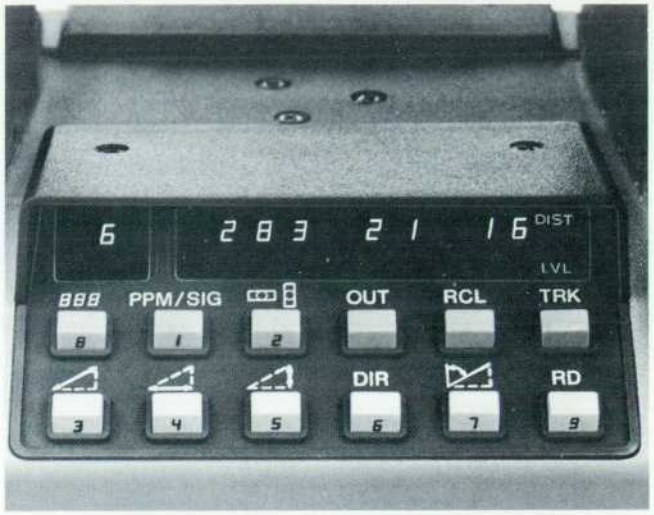

Fig. 4. *Close-up view of 3820A keyboard and display. There are two of these units, one on each side of the instrument, for user convenience.*

movement combined with the one-millimetre height of the photodiodes limits the range to ±370 cc grad (±120 arc seconds). A typical error graph for the tilt sensor is shown in Fig. 11.

Distance Meter System

The main parts of the distance meter are shown in block diagram form in Fig. 12. Although similar in principle to recent HP instruments,[3] the hardware differs greatly on the following points:

- The optical system and sighting telescope are combined.
- Physical size is greatly reduced.
- Distance meter power consumption is reduced to 1.5 W.
- A heterojunction continuous-wave GaAs lasing diode is used.

As in previous models, the distance meter contains an automatic sampling system with an internal path length and an automatic balance system to match the energy through the reference path to the energy received from the target. This matching method enables the instrument to handle a wide range of return-signal strengths—a requirement for longer-range instruments.

The infrared energy is modulated so that the phase difference between the internal reference beam and the portion of the transmitted beam that is reflected back from the target

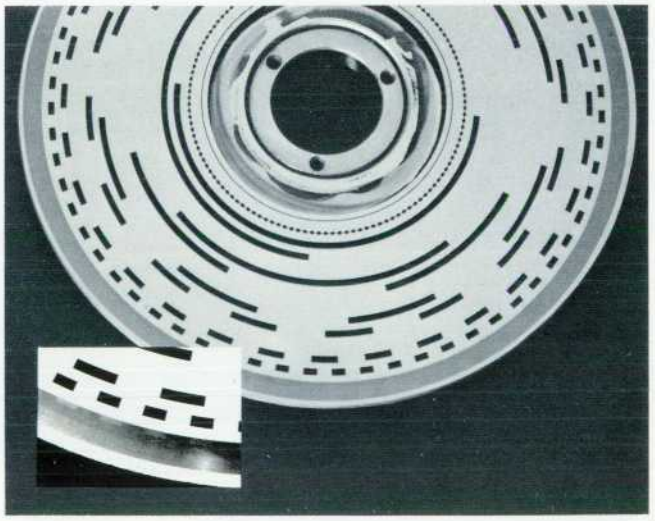

Fig. 5. *The angle encoder disc has three concentric metal film patterns. The combination of the readings from each of these patterns allows for the determination of angular position with one-cc-grad (0.32-arc-second) resolution.*

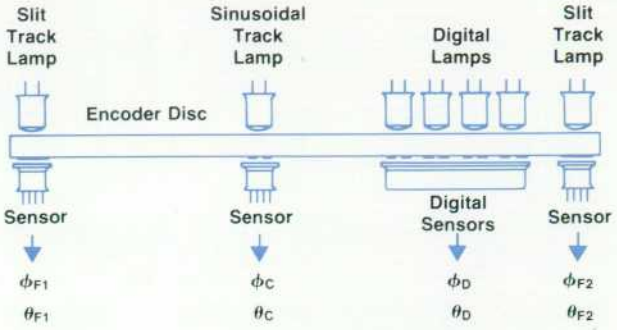

Fig. 6. *Arrangement of the optical sensors for reading the three concentric patterns on each angle encoder disc (φ=vertical, θ=horizontal disc components). Eccentricity errors are eliminated by reading the outermost pattern at two points located across the circle from each other (F1, F2 values).*

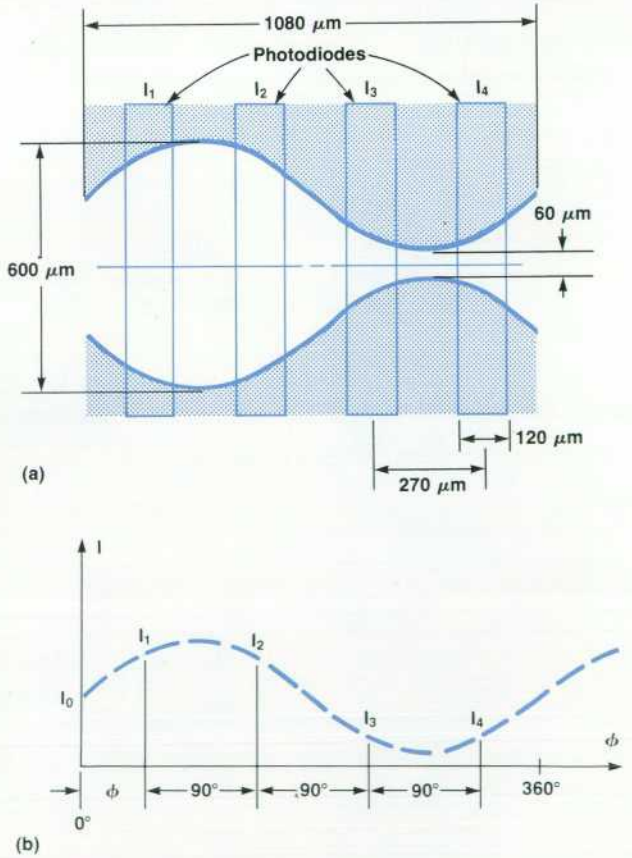

Fig. 7 *(a) Section of the sinusoidal track pattern on the angle encoder disc. The amount of illumination passing through the pattern to each of the regularly spaced photodiodes generates different photocurrents (b) that enable the determination of the pattern position relative to the diode array.*

© Copr. 1949-1998 Hewlett-Packard Co.

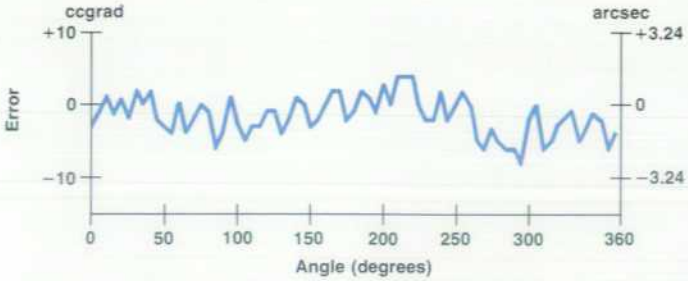

Fig. 8. *Typical interpolation error versus angular position of encoder disc.*

can be measured to determine the distance to the target. Three modulation frequencies are used—15 MHz, 375 kHz and 3.75 kHz. A 360° phase shift for these frequencies corresponds to distance variations of 10, 400, and 40,000 metres, respectively. The readings for each frequency are then combined to give the absolute distance.

These modulation frequencies and the instrument readout give unambiguous distance displays for exceptionally long distances. Distances over five kilometres may be measured under ideal atmospheric conditions.

The receiver detects the returning infrared radiation with a photo-avalanche diode. The diode also functions as a mixer and provides a gain of 75. The transmitting diode is a GaAs lasing diode developed by Hewlett-Packard for the purpose of distance measurement. Fig. 13 shows the laser

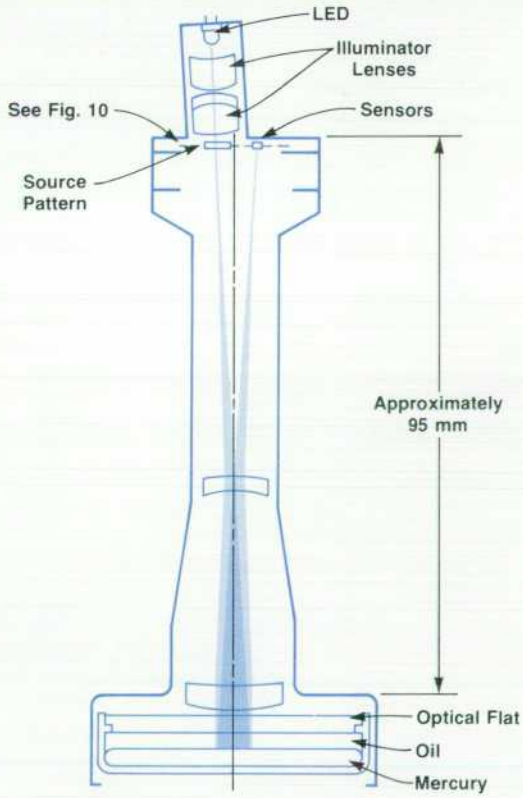

Fig. 9. *Optical system for 3820A tilt sensor. The mercury pool at the bottom establishes a reflective plane that is perpendicular to the force of gravity.*

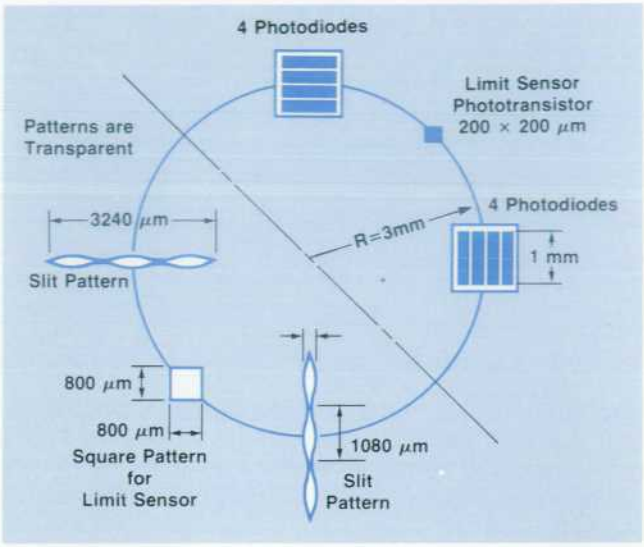

Fig. 10. *Arrangement of slit patterns and optical sensors for tilt meter. The tilt position measurement technique is the same as that used for angle measurement.*

modulation and control system. An optical feedback loop stabilizes the laser operating point over a wide temperature range. The laser and its control loop are housed inside a hermetically sealed metal package with an optically flat window. Because of the high sensitivity of the receiver and the high radiance of the laser beam, the instrument range is five kilometres with a six-prism *retroreflector* assembly. To prevent input circuit overload, it is necessary to use an attenuator on the telescope objective for distances less than 250 metres. Alternatively, less efficient reflectors may be used. Since the long-range accuracy depends largely on the accuracy of the modulation frequency, a low-temperature-coefficient crystal is used. The crystal stability specification is ±4 ppm from −10°C to +40°C.

The group refractive index has been derived for standard air (15°C and 760 mmHg) and a laser radiation wavelength of 835 nm using two different references (see page 9):

$n_g - 1 = 279.34 \times 10^{-6}$ where n_g is the group index (8)

c = 299,792.5 km/s (9)

resulting in a modulation frequency with zero-ppm correction of 14.985439 MHz for standard air. In the 3820A, the frequency is set at +110 ppm, or 14.987087 MHz.

Microprocessor Functions

The 3820A uses a microprocessor derived from HP

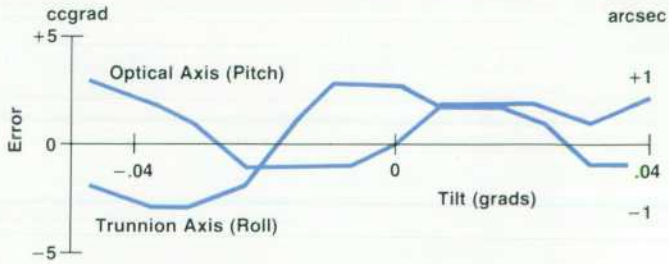

Fig. 11. *Typical axis tilt interpolation errors versus tilt angle for tilt sensor.*

© Copr. 1949-1998 Hewlett-Packard Co.

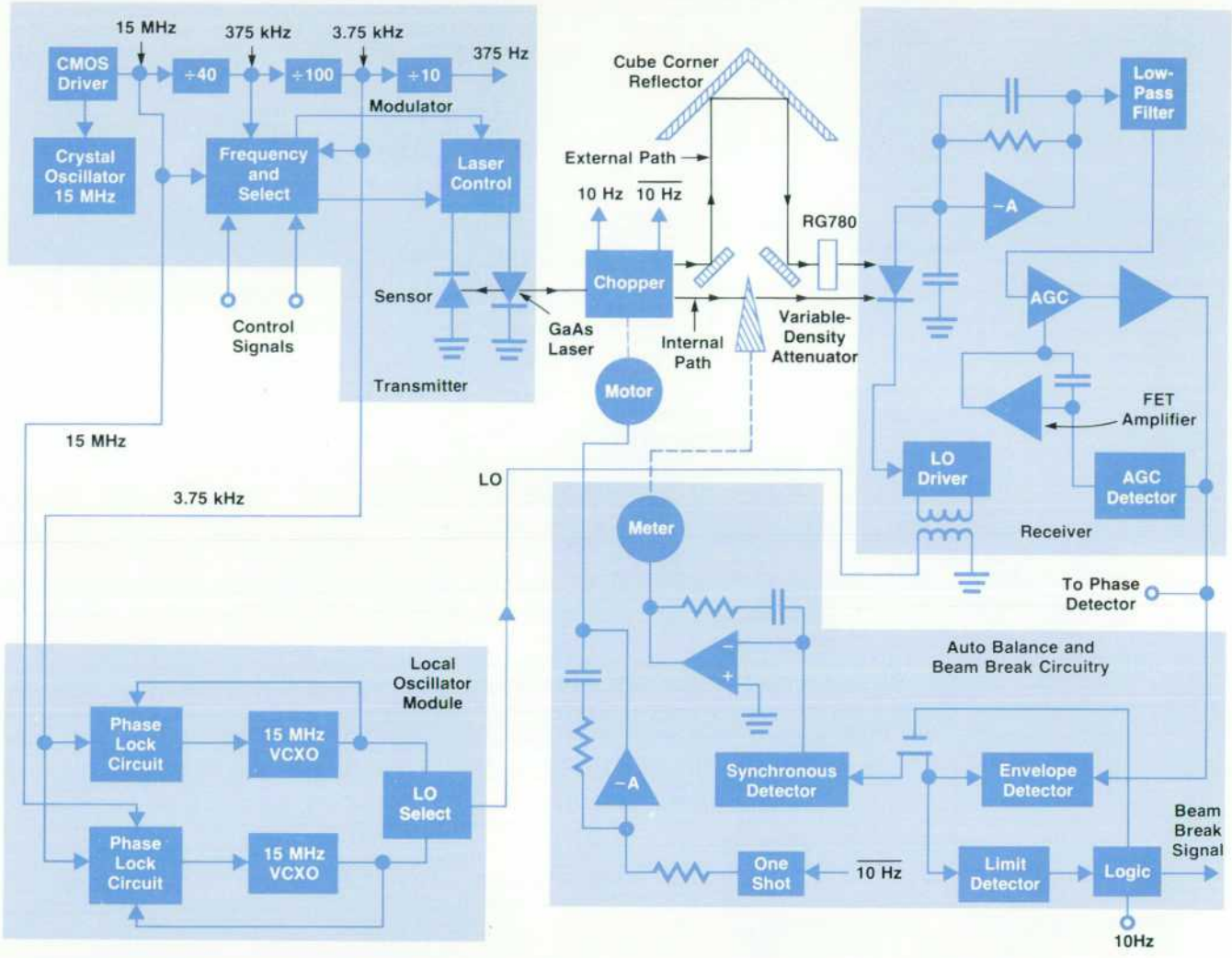

Fig. 12. *Distance meter block diagram. This assembly can measure distances up to five kilometres with ±(5 mm + 5 mm/km) accuracy over a temperature range of −10° to 40°C.*

pocket-calculator technology to perform various functions within the instrument. Among these functions are the following:

- Control various measurement sequences and the display.
- Process the intermediate results from the angle encoders, tilt meter, and distance meter.
- Perform numerous calculations and corrections such as compensating angles for instrument tilt and computing projected distances.
- Provide an internal self-test sequence, which checks for the presence of many internal signals in the angle encoders, tilt meter, and distance meter.

The routines needed for control and computations are stored in a 4K-byte ROM which is roughly divided into four parts of 1K bytes each, corresponding to:

- Distance measuring routines
- Angle measuring routines
- Self-test and service tests
- Keyboard, display and control routines.

Multifunction Sequence

An example of the control function of the microprocessor

(continued on page 10)

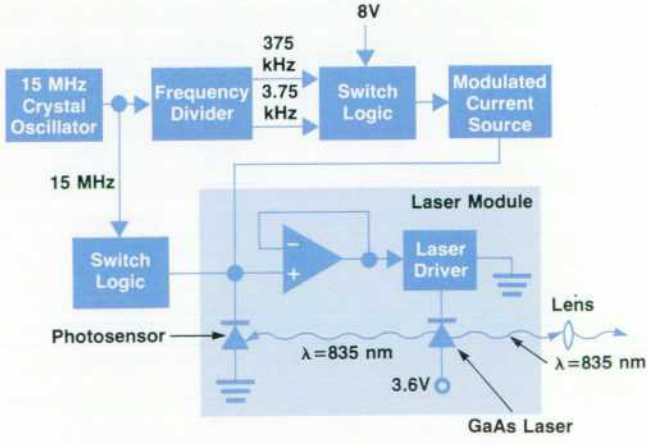

Fig. 13. *Laser control and modulation system. The system uses a custom GaAs lasing diode developed by Hewlett-Packard for this purpose.*

© Copr. 1949-1998 Hewlett-Packard Co.

Distance Correction for Variations in Air Temperature and Pressure

In an electronic distance meter the distance is derived from the amount of time required for the transmitted infrared beam to make the round trip to the retroreflector and back. Therefore, it is necessary to accurately know the velocity of the infrared radiation in air. In general, an unmodulated plane wave will have a velocity

$$v = c/n \qquad (1)$$

where c is the velocity of light in a vacuum and n is the index of refraction for the medium. The refractive index for air depends on the radiation wavelength as well as the density of the air. The wavelength dependence can be approximated by[1]

$$(n-1) \times 10^8 = 27259.9 + \frac{153.58}{\lambda^2} + \frac{1.318}{\lambda^4} \qquad (2)$$

where λ is the radiation wavelength in micrometres. This expression is for standard air, which is dry air at 15°C and 760 mmHg pressure.

For an amplitude modulated wave the amplitude maxima propagate with a group velocity u. The group velocity is related to the phase velocity v by[2]

$$u = v - \lambda \frac{dv}{d\lambda} \qquad (3)$$

Now, define the refractive index for the group velocity, n_g, as c/u. For air it can be assumed that

$$\frac{\lambda\, dv}{v\, d\lambda} << 1$$

Thus, the following approximation can be made.

$$\frac{1}{u} = \left[v\left(1-\frac{\lambda dv}{v d\lambda}\right)\right]^{-1} \approx \frac{1}{v}\left[1+\frac{\lambda dv}{v d\lambda}\right] \qquad (4)$$

From (1)

$$dv = -\frac{c}{n^2} dn \qquad (5)$$

Then, using (1), (4) and (5) we can derive the following result

$$n_g = \frac{c}{u} = \frac{c}{v}\left[1-\frac{\lambda c}{v n^2}\frac{dn}{d\lambda}\right] = n - \lambda \frac{dn}{d\lambda} \qquad (6)$$

Combining (2) and (6) yields

$$(n_g-1) \times 10^8 = 27259.9 + \frac{460.74}{\lambda^2} + \frac{6.59}{\lambda^4} \qquad (7)$$

For the laser wavelength used in the 3820A, 0.835 μm, this becomes

$$(n_g-1) \times 10^8 = 27934.28 \qquad (8)$$

Therefore,

$$n_g = 1.0002793428$$

Since c = 299792.5 kilometres/second, the group velocity is then c/n_g = 299708.8 kilometres/second. The maximum modulation wavelength, λ_m, desired for the instrument is 20 metres so that the modulation frequency, f_m, will exhibit 360° of phase shift for every 10 metres of distance between the instrument and the retroreflector. Therefore, the highest modulation frequency is

$$f_m = \frac{U}{\lambda_m} = 14985439\ \text{Hz}$$

The influence of water vapor in the atmosphere on group velocity has been neglected since this effect is believed to be less than one ppm for near-infrared radiation.

Temperature and Pressure Correction

It is assumed that the refractive index for air varies from the ideal value of 1.0 for vacuum in proportion to the density of the air, ρ, such that

$$(n_g-1)\,|_{\rho_2} = \frac{\rho_2}{\rho_1} \times (n_g-1)\,|_{\rho_1} \qquad (9)$$

for small variations in density. Since it is also assumed that air behaves according to the ideal gas law, pV = RT, and knowing that the density is inversely proportional to the volume, V, of the air, then the refractive index for any temperature T_2 and pressure p_2 can be found by

$$(n_g-1)\,|_{p_2,T_2} = \frac{V_1}{V_2} \times (n_g-1)\,|_{p_1,T_1} \qquad (10)$$

given the value at a temperature T_1 and pressure p_1. Solving for V_1 and V_2 using the ideal gas law and using (8) for the refractive index in standard air (p_1 = 760 mmHg, T_1 = 273.2 + 15°K), expression (10) becomes

$$(n_g-1)\,|_{p,T} = 279.34 \times 10^{-6} \times \left[\left(\frac{p}{760}\right) \times \left(\frac{273.2+15}{237.2+T}\right)\right]$$

$$= \frac{105.92p}{(273.2+T)} \times 10^{-6}$$

where p is the pressure in mmHg and T is the temperature in °C. From this, it can be derived that the distance correction is

$$\text{Correction in ppm} = 279.34 - \frac{105.92p}{273.2+T} \qquad (11)$$

This correction can be entered into the 3820A via a front-panel control. The microprocessor then applies this correction to all subsequent distance measurements.

References

1. Froome and Essen, *The Velocity of Light and Radio Waves*, Academic Press, 1969, pp 24-28.
2. Born and Wolf, *Principles of Optics*, 2nd Ed., MacMillan, 1964.

© Copr. 1949-1998 Hewlett-Packard Co.

is the routine for the **MULTI** key. This key activates a measurement sequence that combines angle and distance readings for a three-dimensional measurement result. The sequence is:

- measure and output the horizontal angle
- measure and output the zenith angle
- measure and output the slope distance.

To accomplish this complex control function the transducers have to be designed for control by a processor and also have to contain the hardware necessary for communication with the processor. Examples of these requirements are the eight control lines for the circle interpolators and the accumulator that functions as the common analog-to-digital converter for all systems. The control and reception of data from the transducers is done via the I/O module. This unit is the communication link between the processor and the measurement systems.

With the multifunction sequence it is also possible to make repeated measurements at a rate of one full sequence every 2.7 seconds. With the 3820A, the 38001A HP-IB interface and a data processor (e.g., 9825A) one can assemble a system that can track the position of slow moving targets, assuming that one can keep the telescope aimed at the target manually.

Angle Correction

The 3820A Electronic Total Station is the only instrument presently available that compensates both horizontal and vertical angles for instrument tilt. It is only necessary to level the instrument within 120 arc seconds to maintain full angular accuracy. However, leveling to one arc minute is recommended to avoid positioning errors using the optical *plummet*. This is easily and quickly accomplished using the circular bubble level on the *alidade* of the instrument. The corrections for the remaining tilt of the vertical axis with respect to gravity are:

$$\text{Zenith angle correction} = \Delta\phi = \beta + \tfrac{1}{2}\delta^2 \cot(\phi) \qquad (10)$$

$$\text{Horizontal angle correction} = \Delta\theta = \delta\cot(\phi) - \tfrac{1}{2}\beta\delta\left[1 + 2\cot^2(\phi)\right] \qquad (11)$$

in which: β = tilt along the telescope axis
δ = tilt along the trunnion axis
ϕ = zenith angle

Analysis of (10) shows that the second order term for $\Delta\phi$ can be neglected. For example: if $\beta = \delta = 120$ arc seconds (the limit of the tilt meter), the second order term for $\Delta\phi$ is only three arc seconds at a zenith angle of 1°. At a zenith angle of 45°, the term is less than 0.1 arc second.

Both terms of equation (11) may be significant. In the 3820A, only the first-order correction is applied when the line of sight is within 45° of horizontal. Beyond this range, both terms are used. To illustrate the importance of the horizontal-angle correction, consider that at a zenith angle of 75°, every four arc seconds of tilt introduces one arc second of error. By automatically making this correction, the 3820A eliminates the need for precise leveling.

Distance Consistency Check

As in previous HP distance meters, the 3820A incorporates a consistency check on the distance data. While distance data is being accumulated, the processor keeps a running total of the mean and variance of the readings. If the

Development of the 3820A

The development of an instrument of this complexity can only be accomplished when many favorable factors coincide. Existing technology in light-emitting devices, photodiodes, photolithography and electronic microcircuits at the start of the development project indicated that it was possible to design a compact fully-integrated instrument measuring both angles, tilt and distance.

Initally a small group was formed to investigate methods for angle measurement and design the basic optical system of the telescope and distance meter. This early group included Charles Moore who contributed much to both the optical and electronic designs, Walt Auyer who designed the mechanical elements of the angle transducers, Billy Miracle, our mechanical design leader, who designed the temperature-compensated objective cells for the telescope, Jim Epstein who designed most of the digital control system, including the software design for the microprocessor control, and Ron Kerschner who designed the mechanical systems for the distance meter and level sensor.

This team later became the nucleus of a much larger team and was aided by many specialists. Tom Christen and Hal Chase took over the design of the thin-film microcircuits needed to construct the angle transducers, tilt meter and distance meter. The industrial design of the instrument was being firmed up during this time by Arnold Joslin who made significant contributions to keeping the instrument compact and portable.

When the group was increased to full strength, Dave Daniels-Lee and Sanford Baran took on the majority of the analog circuit design while Craig Cooley joined the team to design the main structural frame and side covers of the instrument. Towards the end of the design phase Craig Cooley also designed the leveling base. With Billy Miracle taking on a larger part of the project management in the mechanical area, Dave Sims joined the group to design the mechanical parts for the main telescope. Dave also designed the carrying case for the 3820A. This case provides a high degree of protection in a compact size.

Besides the central design team, many support groups helped to realize this design. The tooling effort, involving several people, was coordinated and guided by Wilbur Saul. Administrative help was coordinated by Rod Lampe and Vicki Worden who controlled parts supply, material lists and specification drawings. Market research was performed by the marketing group in the Civil Engineering Division. Fritz Sieker and Tony Robinson contributed greatly in the areas of keyboard definition and software routines to be used for data reduction and correction. Corporate engineering and HP Labs assisted in the angle-encoder investigation and also developed the solid-state GaAs heterostructure laser that gave the distance meter its 5-km range. Special recognition is deserved by the group in HP Labs who improved the laser characteristics to make it suitable for the demanding application of electronic distance measurement. The encouragement received from Barney Oliver and Bill Hewlett helped the design teams overcome difficult hurdles.

During the production effort, a large group of new people was involved on the project. Mike Bullock served during the transition period as project manager until the production staff under the leadership of Mike Armstrong and Jim White took charge of production.

Finally special mention should go to Bill McCullough, Division Manager, and Bill Smith, Lab Manager, who believed in the project's ultimate promise and supported the effort with their guidance during the development period.

Alfred F. Gort

Al Gort was born in Arnhem, Netherlands and studied electrical engineering at Eindhoven Technical University. After completing his undergraduate studies in 1961 he attended California Institute of Technology and was awarded an MSEE degree in 1962. Al joined HP and has been active in instrument design for wave analysis, infrared detection and calibration. He was the R&D project manager for the 3820A and now heads the production engineering team for the 3820A. Al is married and has a son and a daughter. His outside interests include sailing, hiking, backpacking, cross-country skiing and growing cherries.

© Copr. 1949-1998 Hewlett-Packard Co.

Glossary

ACHROMATIC. Transmits light without separating it into its constituent colors.

ALIDADE. A sighting device used for the measurement of angles. Also the mechanical structure of a THEODOLITE. See page 12.

ASPHERIC. A mirror or lens surface that varies slightly from a true spherical surface. This is done to reduce lens aberrations.

AUTOCOLLIMATION. A process of aligning a telescope's line of sight perpendicular to a mirror's surface. The telescope is used to project an image of a pattern toward the mirror. By superimposing the image reflected back by the mirror onto the original pattern in the telescope, the mirror and telescope are properly aligned.

BOUWERS. An optical design, named after the originator, in which reflections take place at two silvered concentric spherical surfaces. Since both surfaces have a common focal point, SPHERICAL ABERRATIONS are greatly reduced.

CASSEGRAIN. A reflecting telescope in which the long optical path is folded by reflecting the incoming light from a paraboloidal primary mirror onto a small hyperboloidal secondary mirror that in turn reflects the light back through a hole in the center of the primary mirror to an eyepiece.

CATADIOPTRIC. Optical processes using both reflection and refraction of light.

CHROMATIC ABERRATION. An optical lens defect that causes light color separation because the optical material focuses different light colors at different points. A lens without this defect is said to be ACHROMATIC.

COMA. A symptom of the presence of optical errors, so that a point object has an asymmetrical image (looks like an egg-shaped spot).

DIOPTER. A measure of lens power equal to the reciprocal of the lens focal length in metres.

GALILEAN TELESCOPE. A telescope using optical refraction. Its primary lens is convex and converges the incoming light. The eyepiece is a concave lens that diverges the beam from the primary lens and presents an erect image.

GRAY CODE. A modified binary code. Sequential numbers are represented by binary expressions in which only one bit changes at a time; thus errors are easily detected.

MANGIN MIRROR. A mirror in which the shallower surface of a negative MENISCUS LENS is silvered to act as a spherical mirror. The light traveling through the other surface and the glass to the mirror is then corrected by the glass for the SPHERICAL ABERRATION of the mirror.

MENISCUS LENS. A thin lens with one convex and one concave surface. The surface with the greatest radius of curvature is the convex surface for a positive lens and the concave one for a negative lens.

PARAXIAL. Lying near the axis.

PECHAN PRISM. A prism using two glass elements that shortens an optical path by reflecting a light beam internally five times. The exiting image is erect. Also known as a Schmidt prism.

PLUMMET. A device for centering a THEODOLITE over a specific location. In the 3820A this is done optically by looking through a sight in the base and centering the internal crosshairs on the location required.

PLUNGING. A technique for canceling some of the mechanical errors in a THEODOLITE. Plunging involves measuring the angles to a target twice. The target is sighted and the angles are measured. Then the ALIDADE is rotated 180°, the telescope is flipped over and the angles are measured again. The sign of the error changes between the two readings, but not the magnitude. By averaging the two readings, the error is eliminated.

RAMSDEN EYEPIECE. An eyepiece assembly using two plano-convex lenses of identical power and focal length. They are mounted with their planar surfaces facing out at each end and are separated by a distance equal to their common focal length.

RETICLE. A pattern of intersecting lines, wires, filaments, or the like placed in the focus of the objective element of an optical system. This pattern is used for sighting and alignment of the system.

RETROREFLECTOR. A device using prisms or an arrangement of mirrors to reflect light radiation back in a path parallel to the incident path.

SECONDARY SPECTRUM. The remaining CHROMATIC ABERRATION for an ACHROMATIC lens. The corrective techniques used for the lens are not equally effective for the entire color spectrum so that some regions will exhibit some color errors.

SPHERICAL ABERRATION. The optical error introduced by the fact that incident rays at different distances from the optical axis are focused at different points along the axis by reflection from spherical mirror surfaces or refraction by spherical lenses.

THEODOLITE. An optical instrument for measuring vertical and horizontal angles from a specific location to a distant target.

TRUNNION. An axle or pivot mounted on bearings for tilting or rotating the object it supports. See Fig. 1 on page 12.

ZENITH. A point directly overhead. Zenith angles are angles measured from this point.

variance is within an internal limit, the mean is displayed as the result. If the variance exceeds this limit, the mean is displayed and flashed to indicate a marginal result. Finally, if no reading can be made, a flashing zero is displayed. A more complete description of the basic process is given in the paper by White.[4] While the process in the 3820A differs in some details, it is essentially the same.

References

1. M.L. Bullock and R.E. Warren, "Electronic Total Station Speeds Survey Operations," Hewlett-Packard Journal, April 1976.
2. D.E. Smith, "A Versatile Computer Interface for Electronic Distance Meters," Hewlett-Packard Journal, June 1980, p. 5.
3. D.E. Smith, "Electronic Distance Measurement for Industrial and Scientific Applications," Hewlett-Packard Journal, June 1980.
4. J.W. White, "The Changing Scene in Electronic Distance Meters," paper presented at the ACSM Annual Meeting, St. Louis, Missouri, March 1974.

SPECIFICATIONS

HP Model 3820A Electronic Total Station

DISTANCE
RANGE (under good conditions—those found during the day when minimal heat shimmer is evident):
1 km (3300 ft) to a single-prism assembly
3 km (9800 ft) to one triple-prism assembly
5 km (16,400 ft) to two triple-prism assemblies.
ACCURACY (rms slope distance):
± (5 mm + 5 mm/km) for −10° to 40°C.
± (10 mm + 10 mm/km) for −20° to −10°C and 40° to 55°C.
UNIT OF DISPLAY (switch selectable):
0.001 m or 0.001 ft in accurate mode
0.01 m or 0.01 ft in track mode
DISPLAY RATE (track mode):
1.5 s/reading-slope distance, minimum
2.5 s/reading-projected distance, minimum
LIGHT SOURCE:
Type: Solid-state GaAs lasing diode (non-visible)
Wavelength: 835 nm, nominal value
Power Output: Complies with DHEW radiation performance standards, 21 CFR, subchapter J.
Beam Divergence: 370 cc grad (2 arc-minutes) full angle, nominal value.

ANGLE
RESOLUTION:
Degree Mode: 1 arc-second
Grads Mode: 1 cc grad
ACCURACY (rms of direction with telescope in direct and reversed position for −20° to 55°C):
HORIZONTAL: ±6 cc grad (±2 arc-seconds)
VERTICAL: ±12 cc grad (±4 arc-seconds)
UNIT OF DISPLAY: (Switch selectable).
Degrees, minutes, seconds to 1 arc-second.
Grads to 1 cc grad.
DISPLAY RATE:
2 s/reading with automatic level compensation
0.5 s/reading without automatic level compensation
AUTOMATIC LEVEL COMPENSATION:
Type: Dual-axis liquid-surface reflection
Range: ±340 cc grad (±110 arc-seconds), approximately

DIGITAL OUTPUT
TYPE: One-way-handshake bit-serial-data transfer from 3820A to peripheral.
DATA WORD: 14-digit (56-bit) BCD word.

TELESCOPE
MAGNIFICATION: 30×.
IMAGE: Erect.
OBJECTIVE APERTURE: 66 mm.
FIELD OF VIEW: 1.67 grad (1.5°).
FOCUS RANGE: 5 m (16 ft) to ∞.
Illuminated cross hairs.
Two sighting collimators for rapid target acquisition.

POWER SUPPLY (Internal, rechargeable battery):
TYPE: 3.6 Vdc nickel-cadmium (HP 11421A).
OPERATING TIME: 3 hours typical, ~400 measurements.
CHARGING TIME: 16 hours (full charge).

OPERATING CONTROLS
Switch panel for controlling operating modes of instrument.
Two function-switch-panels for convenient selection of measurement in either direct or reversed position.
Concentric lock and tangent screws.
Two-speed tangent screws.
Two-speed circle indexing screws.

MECHANICAL INTERFACING
INTERFACE: HP 11426A Leveling Base.
ROUGH LEVELING: Circular bubble on alidade with a sensitivity of 2.5 arc-minutes/mm.
CENTERING: Optical plummet in alidade with magnification of 5× and focus range of 0.6 m (2 ft) to ∞.

DIMENSION AND WEIGHT
INSTRUMENT: 162×239×298 mm (6.4 × 9.4 × 11.7 in).
WEIGHT: 9.9 kg (21.9 lb) (including battery).

PRICE IN U.S.A.: $34,000.00

MANUFACTURING DIVISION: CIVIL ENGINEERING DIVISION
815 Fourteenth Street, S.W.
Loveland, Colorado 80537 U.S.A.

© Copr. 1949-1998 Hewlett-Packard Co.

Mechanical Design Constraints for a Total Station

by Ronald K. Kerschner

THE ACCURACY of a distance and angle measurement system is greatly dependent on its mechanical design. The geometrical constraints imposed on the 3820A Total Station required careful analysis and design for its fabrication.

The principal axes of the 3820A are shown in Fig. 1. The trunnion axis establishes an axis of rotation for the telescope and should be perpendicular to both the optical and vertical axes. The vertical axis should define an axis of rotation for the instrument that does not change as the alidade is rotated on its base. In addition, the vertical axis must pass through the intersection of the optical and trunnion axes for accurate angular measurement to targets at short distances.

Vertical Axis

The horizontal angle error introduced when the vertical axis does not intersect the optical axis can be expressed as

$$\text{Vertical-axis centering error} = \tan^{-1}\left[\frac{\text{Vertical-axis offset}}{\left(\begin{matrix}\text{apparent target}\\ \text{distance}\end{matrix}\right) \times \sin\left(\begin{matrix}\text{zenith}\\ \text{angle}\end{matrix}\right)}\right]$$

This equation shows that when the target distance increases to large values, the error decreases to zero.

The vertical-axis centering is controlled to within 0.25 mm (0.01 in) by the mechanical tolerances and by adjustment of the optical axis. Axis wobble is a measure of the imperfections in the vertical axis. It is measured by taking readings for both horizontal-level-sensor axes versus the horizontal angle for the alidade. The level-sensor readings are converted to polar coordinates. The horizontal angle is subtracted from the level-sensor polar angle. Given a perfect vertical-axis bearing, the polar level vector will rotate in the same direction and at the same rate as the alidade horizontal angle. Variances in direction and rate are due to

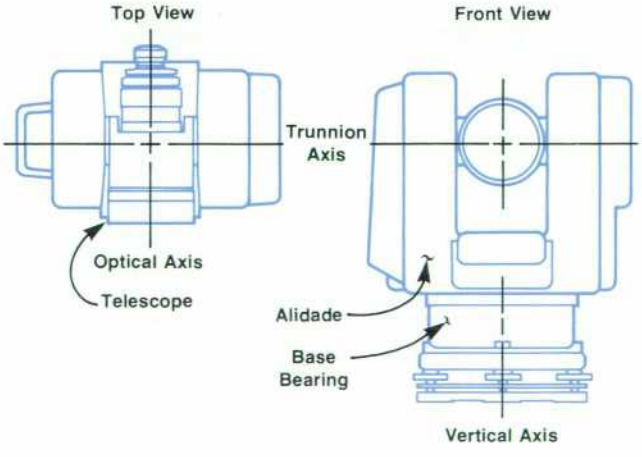

Fig. 1. *Principal axes of the 3820A. The instrument rotates horizontally about the vertical axis, the telescope rotates vertically about the trunnion axis, and the optical axis is the line of sight for the telescope.*

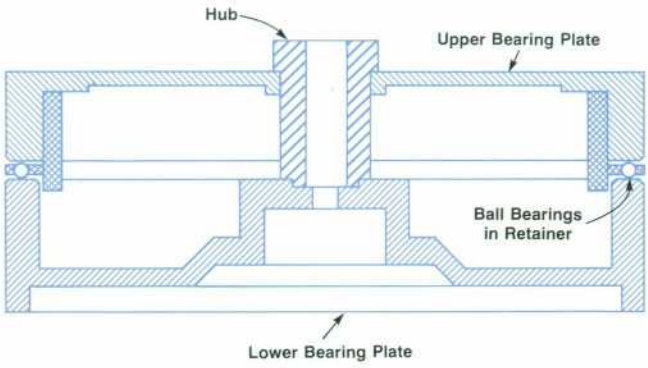

Fig. 2. *Vertical-axis support bearing cross-section. The upper bearing is supported by three ball bearings that allow it to rotate freely on the lower bearing. The ball bearings are kept in position by a nylon retainer ring.*

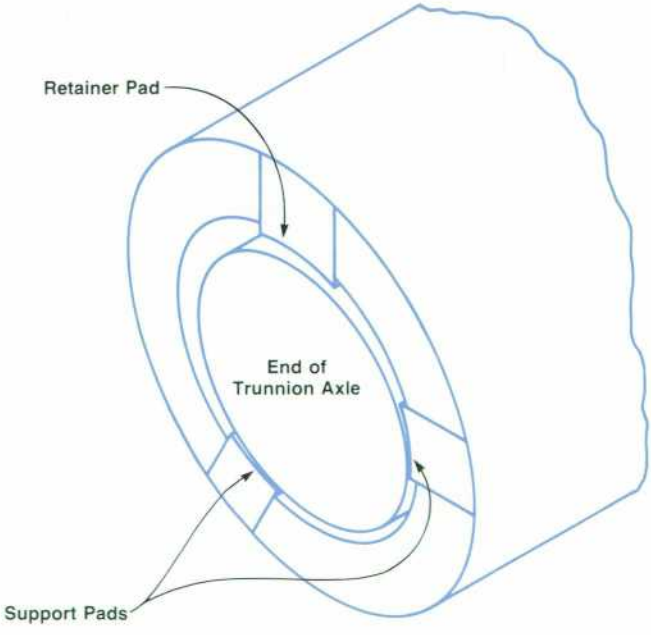

Fig. 3. *Trunnion axle bearing. Two integral raised pads are machined 120° apart on the inner surface of a ring to support the axle. A third pad located above the axle serves as a retainer.*

© Copr. 1949-1998 Hewlett-Packard Co.

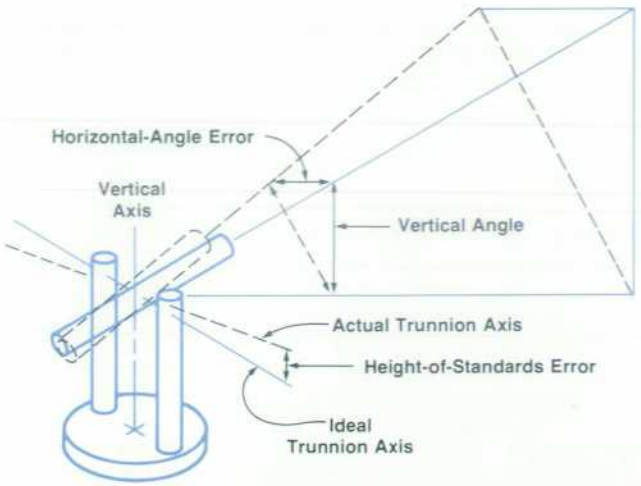

Fig. 4. *Exaggerated illustration of height-of-standards error. This error contributes to errors in horizontal angles when measuring targets at various vertical angles.*

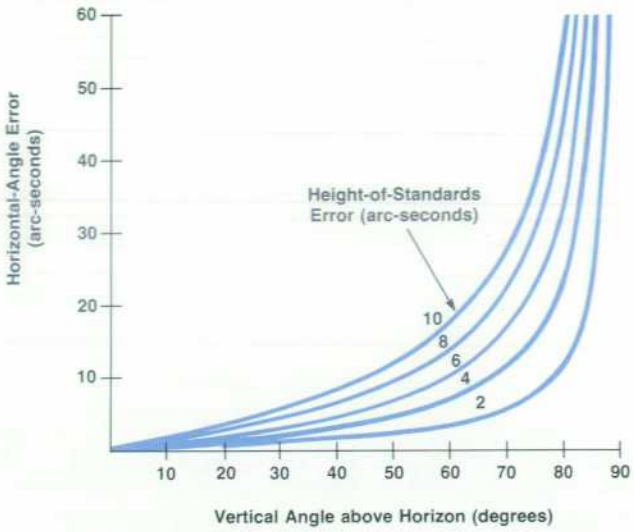

Fig. 5. *Family of curves showing horizontal-angle errors versus vertical-angle differences for varying degrees of height-of-standards error.*

imperfections in the vertical-axis bearing.

Another way to explain vertical axis wobble is to imagine a fixed screen being placed above the instrument perpendicular to the vertical axis and in a plane parallel to the earth's surface. The axis wobble is a plot of the movement of the intersection of the vertical axis with this screen as the alidade is rotated on its base. Vertical-axis wobble complicates the determination of the horizontal level-sensor indexes. Thus, the wobble is tightly controlled to minimize the problems encountered in determining the indexes.

The vertical-axis bearing system is shown in Fig. 2. The clearance between the hub and the top bearing plate controls the centering uncertainty. The lower bearing is lapped flat to within 0.25 μm (10 μin). The balls are made with a diameter tolerance of 0.5 μm (20 μin). The upper bearing is machined to have three equidistant high points around its perimeter. The surface peak-to-valley variation for this bearing is 2.5 μm (100 μin). Thus, the lower bearing establishes a plane, the balls serve as a rolling element to reduce friction, and the top bearing provides three-point kinematic contact. The bearing plates and the hub are made from hardened steel to minimize wear.

Trunnion Axis

Since the trunnion axis is always close to being perpendicular to gravity, a simple V-block bearing can be used. This type of bearing provides line contact on the axle. V-blocks are used extensively in mechanical measurement for establishing a reference on cylindrical parts. Because the instrument will be shipped and handled in positions other than those perpendicular to gravity, the bearing requires a third retaining point. The actual bearing used is shown in Fig. 3. The two lower pads provide an approximation to a V-block. The upper pad is there to retain the axle in abnormal positions and is not in contact with the axle during normal use.

Height-of-standards error results when the trunnion axis is not perpendicular to the vertical axis (Fig. 4). If a height-of-standards error exists, horizontal-angle errors are introduced when two targets are at different vertical angles. A plot of the horizontal-angle error between two points, one on the horizon and the other at varying angles above the horizon, versus their difference in vertical angle for various values of height-of-standards error is given in Fig. 5.[1] The height-of-standards error is controlled to less than five arc seconds in the 3820A.

An error in horizontal angles can also be generated by collimation error, which results if the optical axis is not perpendicular to the trunnion axis. This error is corrected to less than five arc seconds by adjusting the telescope optics and fine-tuning electronically at the factory by use of programmable read-only memories (PROMs).

Like the vertical axis, the trunnion axis also suffers from axis wobble. Wobble of the trunnion axis is caused by the profiles of the left and right ends of the axle not having the same geometry, or by scope imbalance. This wobble will create collimation and height-of-standards errors.

All of the instrument geometry errors can be cancelled by plunging, except for wobble of the trunnion axis (for a description of the plunging technique, see the glossary on page 11). For this reason wobble of the trunnion axis is tightly controlled to less than 1.5 arc seconds. However, the

Ronald K. Kerschner

Ron Kerschner received a BSME degree from Colorado State University in 1972. He joined HP in the same year and has worked on mechanical design for the level sensor and distance meter module used in the 3820A Total Station. Then he was involved with the production of the 3820A and is currently working on new products. Ron was born in Sterling, Colorado. He and his wife and two children now live in Loveland, Colorado. When Ron isn't landscaping their new home or busy with his studies for an MSEE at Colorado State, he enjoys photography, running, bicycling, hiking and cross-country skiing.

© Copr. 1949-1998 Hewlett-Packard Co.

other errors are also controlled so that the 3820A can be used for single-shot readings when only moderate angle accuracy is needed.

Acknowledgments

In view of the mechanical tolerances required by the 3820A, a great deal of credit must be given to the Civil Engineering Division precision fabrication and parts inspection groups. Craig Cooley designed the alidade and bottom bearing base. Walt Auyer designed the vertical and trunnion axis systems.

Reference

1. M.A.R. Cooper, Modern Theodolites and Levels, Crosby Lockwood and Sons, London, 1971. (page 62).

A Compact Optical System for Portable Distance and Angle Measurements

by Charles E. Moore and David J. Sims

THE COMBINED DISTANCE METER and telescope optical system of the 3820A Total Station provides two substantial performance advantages. It is smaller than the alternative of using two or more separate optical systems, which is an advantage for a portable field instrument. Also, it uses a single sighting, directly at the center of the cube-corner target, for both distance and angle measurements throughout the entire range of the instrument. A combined optical system such as this provides a difficult task for the lens designer. The designer must reduce the optical aberrations to very low order to achieve good aiming for angular measurements, provide large enough optics to give good distance-meter range, and still design the shortest possible telescope.

The conventional refractive triple used in most *theodolites* proves to be unsatisfactory in two ways. First, if the telescope is balanced about the *trunnion axle*, the beam is quite large at the beam splitter. This requires a large, expensive beam splitter and an undesirably large axle. Second, the *spherical aberrations* and *secondary spectrum* of the telescope are too large for a good theodolite. The second problem can be dealt with by stopping down the telescope with an aperture located behind the beam splitter where it will not affect the distance-meter optics. This reduces the spherical aberrations to below the Rayleigh limit of ¼λ optical-wavefront distortion and limits the secondary spectrum to an acceptable level while retaining the same clear aperture as most one-arc-second theodolites. The problem of the large beam splitter remains.

The solution to this problem uses a *catadioptric Cassegrain* structure as shown in Fig. 1. The folded optics combine with the telephoto effect provided by the negative-power secondary mirror to permit use of a small beam splitter. Spherical aberration can be reduced because the curved mirror provides most of the magnification for the system and has an inherently small spherical aberration due to the large effective index-of-refraction difference at the mirror. All *chromatic aberration*, including secondary spectrum, can be eliminated by having no net magnification in the refractive surfaces.

The catadioptric telescope used is not without problems. First, a catadioptric telescope is difficult to focus onto

NOTE. All words in italics in this article are defined in the glossary on page 11.

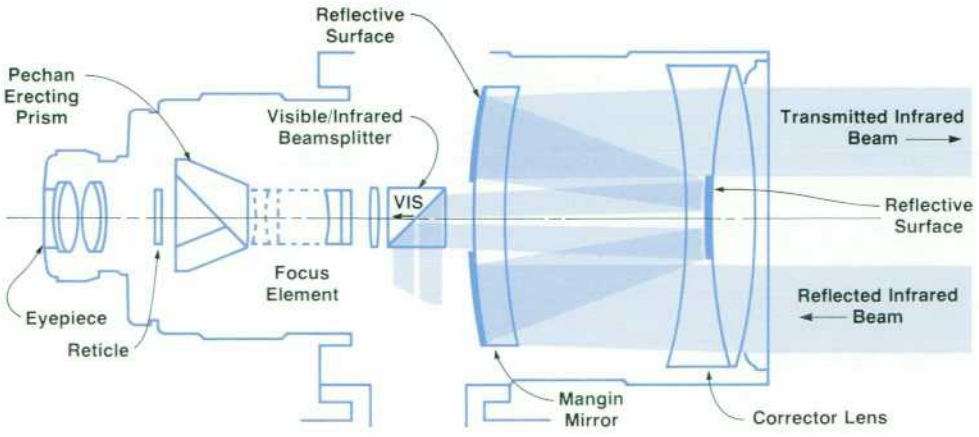

Fig. 1. *Optical system design for 3820A. Visual sighting and projection and reception of the infrared distance measurement beam are shared by the optical elements on the right. The beam splitter deflects the infrared portion down to the distance meter module while allowing the visible portion to continue to the eyepiece and focusing elements on the left.*

© Copr. 1949-1998 Hewlett-Packard Co.

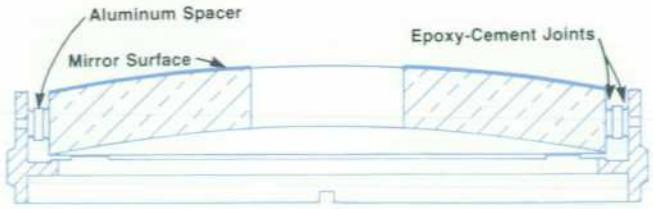

Fig. 2. *The mirror rests on three pads providing stress-free kinematic support. It is secured by cementing at six points around the edge. The difference between the thermal expansion of the cell and the mirror is compensated for by aluminum spacers in the cement joints, and by selection of the cement bond thickness.*

nearby targets. The telephoto effect that was so useful in permitting the use of a small beam splitter also produces a long effective focal length. The travel distance needed in a focusing system depends on the square of the effective focal length. This is reduced by adding a positive-power element behind the beamsplitter to reduce the effective focal length.

Second, this catadioptric Cassegrain structure is difficult to design. Many designs, such as the *achromatic* objective, the classical Cassegrain with two *aspheric* reflective surfaces, and the *Bouwers*, have been analyzed and simplified design procedures have been worked out for them. No previous work has been done for the principles of the 3820A telescope and there are few readily apparent simplifications. In the objective of the telescope there are ten curved surfaces that can be varied to control ten aberrations or *paraxial* characteristics—spherical aberration, *coma* and chromatic aberration at far and near focus, overall length, effective focal length, distance to nearest focus, and size of the secondary reflector. Each curvature affects all, or almost all, of the parameters one wishes to control. Fortunately, modern computer-aided lens design techniques make such complex designs much more manageable.

Telescope Assembly

A mechanical problem is that mirrors are very sensitive to mounting. They must be firmly mounted because any small rotation of a mirror causes twice as much change in angle for a reflected ray. To achieve two-arc-second pointing accuracy with the 3820A the main mirror should be stable to within one arc second, corresponding to a 0.00025-mm variation across the mirror. At the same time the mount should not exert any appreciable force on the mirror, since any distortion in the mirror will result in aberrations in the image. As little as 0.00006-mm distortion of the mirror can cause noticeable loss in resolution.

To avoid these problems the mirror is placed into the cell so that the front surface rests gently on three small pads. A cross-section of this cell is shown in Fig. 2. Since three points locate a sphere, this provides an unambiguous location for the front surface, while minimizing stress to the mirror. This principle of three-point support mounting is used many times in the design of the 3820A.

The mirror has aluminum spacers cemented to its edge. After the mirror has been centered in the cell by three removable leaf springs, it is permanently attached to its cell by cementing the aluminum spacers to the cell. The individual thicknesses of the aluminum spacers and of the epoxy-cement layers were chosen so that the combined thermal expansion of the glass mirror plus the cement-aluminum-cement stack matches that of the stainless-steel cell. This provides a solid mount for the mirror that does not distort the mirror over the temperature range the 3820A experiences in service. The cement attaching the pads to the mirror has a closely controlled compliance, which allows for the difference in expansion of glass and aluminum, but does not allow the mirror to move appreciably.

The cell is screwed into the telescope housing and rests on three pads. The threads fit loosely to allow the cell to rest securely on the pads without having to bend. If the cell were bent to fit both the pads and tight threads, it would distort the firmly attached mirror. The threads are cemented to help secure the cell.

The front element is mounted in a similar manner except that before the element is cemented to its cell, the centering is adjusted in an optical test fixture to correct aberrations that might be introduced by slight miscentering or tilting of other elements. Also, the front cell is shimmed to give the correct fixed focus for the distance meter. These adjustments allow the parts of the telescope to be built to achievable tolerances.

Roelof's Prism Adaptor

The 11429A Roelof's Prism Adaptor (Fig. 3) is a mechanical mount that lets the user view the sun for use in determining the azimuth of a line in surveying work. The Roelof's prism divides the sun into a four-quadrant pattern that is easily centered on the *reticle* crosshair pattern.

Acknowledgments

All of the optical parts for the 3820A, except for a few very specialized parts, are made in Civil Engineering Division's own optical fabrication shop. Billy Miracle and Ron Kerschner participated in the design of the mechanical housing and lens mounts for the 3820A telescope. Alfred Gort, the project leader, provided advice and encourage-

Fig. 3. *Roelof's Solar Prism Adapter. This accessory for the 3820A allows measurement of the angle of the sun above the horizon.*

© Copr. 1949-1998 Hewlett-Packard Co.

David J. Sims

Dave Sims is a native of Salt Lake City, Utah and attended Brigham Young University where he was awarded BSME and MSME degrees in 1970. Dave then joined HP and has worked on mechanical designs for the 3805A and 3820A. Currently he is the mechanical design leader for the 3820A optical accessories. Dave is a co-inventor for a patent on the temperature-compensated lens mount described in this article. He speaks Norwegian and has served eight years with the Utah National Guard as a linguist interrogator. Dave met his wife in Norway during a mission for his church there and they now live with their seven children in Loveland, Colorado. Dave is involved with church leadership and enjoys boating and camping.

Charles E. Moore

Charles Moore received a BSEE degree from the University of California at Berkeley in 1966 and an MS degree in optics from the University of Rochester in 1978. With HP since 1966, he has worked on wave analyzer and voltmeter projects in addition to his work on the receiver and optics for the 3800A Distance Meter and the 3820A Total Station. Charles is a co-inventor for three patents, including one for the 3820A telescope optics. He is a member of the Optical Society of America. Charles was born in Santa Fe, New Mexico and served in the U.S. Army from 1960 to 1963. He is married, has five children, and lives in Loveland, Colorado. His interests include bicycling, running, hiking, cross-country skiing, reading, and chess. Charles has programmed an HP computer to pair opponents in the chess tournaments he enjoys directing.

ment for the optical designs. Norm Rhoads of the optics shop made contributions to improving the manufacturability of the optical designs.

Elton Bingham contributed to the mechanical design of the optical accessories after joining the program in June of 1979. Gary Gates provided manufacturing inputs to the program. Gib Webber's model shop created the early mechanical prototypes in the accessory development, and Bennett Stewart's optics shop provided prototype lenses.

An Approach to Large-Scale Non-Contact Coordinate Measurements

by Douglas R. Johnson

A COMMON PROBLEM in the manufacture of large products is the quality control of critical dimensions. The problem is easily solved on a small item by means of coordinate measuring machines. These machines use a delicate manipulator arm to gently contact the point to be measured. The x, y, and z coordinates are determined by a series of vernier scales and sensitive pressure transducers. Newer machines are computer controlled and motor driven. Resolution approaches 0.5 μm (20 μin) on the best of these machines.

When the item to be measured becomes larger, the cost of a coordinate measurement machine increases dramatically. Alternative methods become attractive as soon as any dimension of the item to be measured exceeds one metre. However, these alternate solutions often have serious drawbacks such as excessive pressure during contact, delay in obtaining results, or highly technical operator requirements. Properly configured, a 3820A system can be an ideal solution for large-scale coordinate determination.

The coordinate determination works on the principle of triangulation—an old, yet effective, solution. The digital theodolite portion of the 3820A Total Station becomes the workhorse of the system. Its high angular accuracy and resolution insure reliable results accurate to better than ten ppm without need for mechanical contact. The data output capabilities of the 3820A provide an effective way of transferring measured angular data to a small computer for real-time analysis and comparison. At least two total stations are required per installation. Improved performance may be realized by adding additional instruments.

Principle of Operation

The 3820A Coordinate Determination System (Fig. 1) works on the principle of triangulation. Two digital theodolites mounted at known points are used to measure angles. They both observe the same set of unknown points and perform accurate angle measurements. The 3820A's level compensator insures that the horizontal plane is indeed horizontal. Because the digital theodolite can measure both horizontal and vertical angles, a three-dimensional solu-

© Copr. 1949-1998 Hewlett-Packard Co.

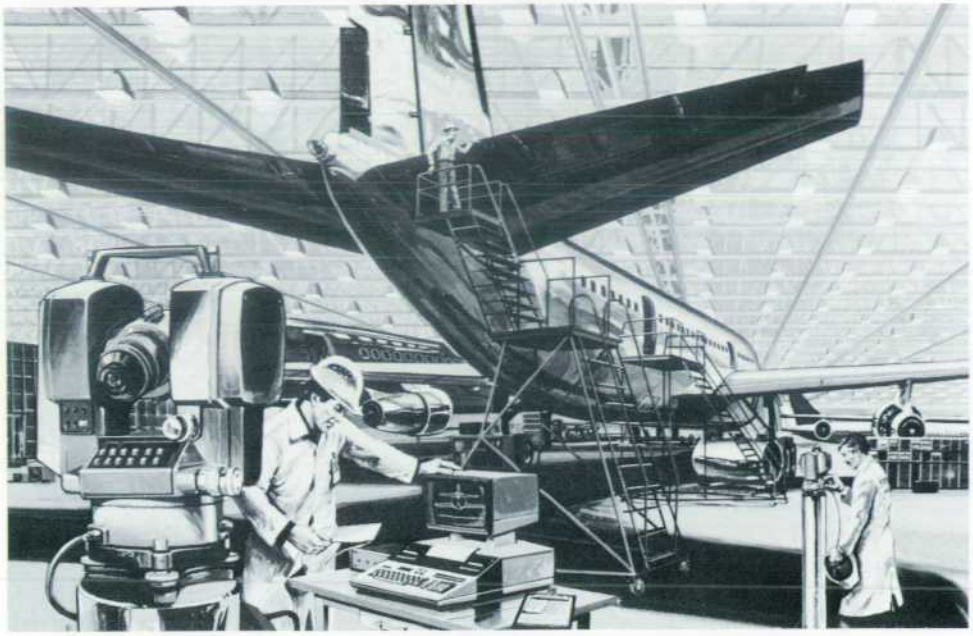

Fig. 1. *The 3820A Coordinate Determination System allows accurate dimensional and positional information to be readily obtained for large objects.*

tion is possible. Four angles are recorded to each unknown point—a vertical (zenith) angle referenced to gravity and an included horizontal angle from each 3820A. These four angles may be readily combined to yield the three coordinates X, Y, and Z of the unknown point.

To further understand the triangulation concept, consider the example shown in Fig. 2. In triangle ABP, the length (r) of one side (AB) and two angles (θ_1 and θ_2) are known. If A and B are in the same horizontal plane ($\phi_t = 90°$), then the law of sines and some elementary trigonometry yields:

$$X_p = \frac{r}{2}\left(1 + \frac{\sin(\theta_2 - \theta_1)}{\sin(\theta_2 + \theta_1)}\right)$$

$$Y_p = r\left(\frac{\sin(\theta_2)\sin(\theta_1)}{\sin(\theta_2 + \theta_1)}\right) \quad (1)$$

The 3820A horizontal-angle measurement capability permits determination of θ_1 by subtracting the angle reading along line AB from line AP. θ_2 is similarly determined. To obtain the elevation or Z coordinate, vertical (zenith) angles are used. If ϕ_1 is the zenith angle (an angle of 0° is straight up) from the 3820A at A to P, the unknown point, ϕ_2 is the angle from the 3820A at B to P, and ϕ_t is the zenith angle between the 3820As (if they are at uneven elevations); then the following relationships may be derived.

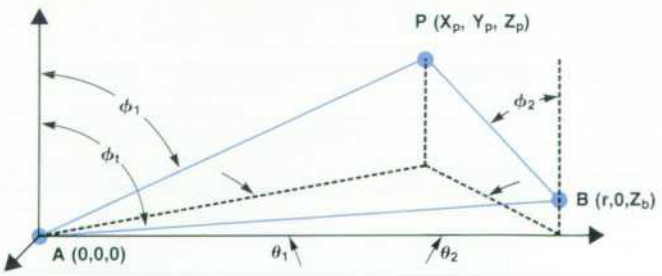

Fig. 2. *By placing a 3820A at position A, another at position B and then measuring the distance r between A and B and the angles θ_1, θ_2, ϕ_1, ϕ_2 and ϕ_t, the unknown position of point P can be determined using simple trigonometry.*

Aircraft Inspection

In the assembly of large aircraft, commercial or military, passenger or cargo, dimensional control plays a key role. Various subsections such as tail assemblies, wing assemblies, engines and their mounts are precisely constructed on rigid manufacturing fixtures. These fixtures are routinely inspected. In addition, once the aircraft is completely assembled, another dimensional inspection must be performed. This insures that critical dimensions are within tolerances, subassemblies have been properly mated, and abnormal stress is not present.

Current inspection methods involve many man-hours of plumbing, taping, and various geometric calculations. The need to perform many individual steps to obtain one measurement complicates the procedure. To obtain the coordinates of a control rivet on a wing fuel-cover latch, a measurement crew must typically:

- Tape the horizontal distance from wing rivet to wing trailing edge using a hand level, invar tape, and two plumb bobs.
- Establish the elevation difference between the rivet and trailing edge using transit and stadia.
- Plumb the trailing-edge point to the ground.
- Tape the trailing-edge height above the ground.
- Tape the distance from the ground point to the coordinate origin.
- Determine the angle from the control axis at the origin to the trailing-edge ground point and from the control axis at the origin to the wing rivet.
- Geometrically solve for the x and y coordinates of the wing rivet from the taped distance and measured angles.
- Mathematically obtain the elevation from the series of individual elevation measurements.

The 3820A Coordinate Determination System will solve the same dimensional measurement problem in less than one-tenth the man-hours while significantly improving coordinate accuracy as a side benefit. A final benefit is the reduction of errors through simple operation, automatic data transfer, and computer control.

© Copr. 1949-1998 Hewlett-Packard Co.

Interfacing the 3820A via the HP-IB

by Gerald F. Wasinger

For the 3820A distance meter to talk to a controller via the HP-IB* the data has to go through some conversions. We must convert from the binary-coded-decimal (BCD) bit-serial data of the distance meter to the ASCII byte-serial data of the HP-IB. This process is accomplished through the 38001A Distance Meter Interface.**

As seen in Fig. 1, the digital output of the 3820A consists of fourteen digits of data—nine digits of measurement data and five mode annunciators. Since each digit is represented by four bits the complete data string contains 56 bits. This data is positive-true and is valid on the falling edge of the clock. The frequency of the clock is 180 kHz so that a complete data transfer from the 3820A to the 38001A occurs in 311.1 μsec.

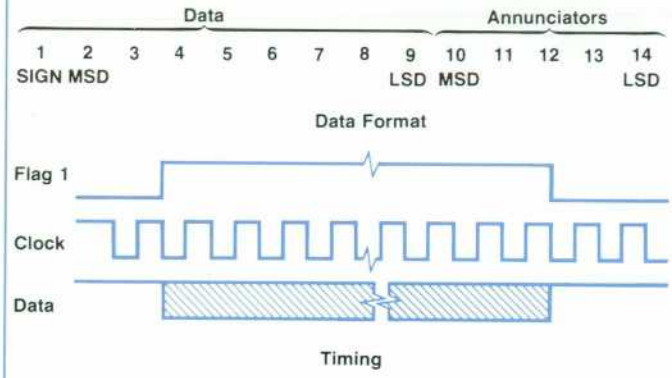

Fig. 1. *Data format and timing for the output of the 38001A. The annunciators indicate to the controller what type of data is being sent.*

Referring to Fig. 2, it is seen that the serial data is loaded into a shift register with four parallel outputs. After every fourth bit a negative pulse is generated that on the falling edge stores the four bits of the shift register into the data RAM and then, on the rising edge, increments the RAM's address counter. This process is repeated until all fourteen digits have been stored in the RAM.

*Hewlett-Packard's implementation of IEEE Standard 488-1978.

**See page 19 of June 1980 issue for a list of the 38001A specifications.

After the 14th digit, Flag 1 goes low telling the 3820A that the 38001A is not currently prepared to accept data. Also, the quad multiplexer selects the sequence for the RAM outputs. Finally, a service request is sent out on the HP-IB to tell the controller that the 38001A has data.

When the controller reads the data from the interface the output may not be in the same sequence as the one generated by the distance meter. The output sequence is programmable via the sequence RAM and gives the user the option of obtaining some or all of the data, in any order.

When the BCD data flows into the four least-significant bits of the bus transceivers, the number three is placed in the four most-significant bits. The result is the ASCII representation of the data in a form suitable for the HP-IB.

After all of the digits have been placed on the bus, a carriage return and line feed are generated to terminate the data string. Also, Flag 1 is set high to allow another data transfer from the 3820A and the multiplexer selects the now cleared 4-bit counter. Thus, the cycle is complete.

A simple program for the 9845B Computer/Controller to read 3820A multifunction data from the 38001A is listed below.

```
10  CLEAR 717
20  OUTPUT 717 USING "#,K";"MLKJIHGFENCO"
30  TRIGGER 717
40  ENTER 717; Datum, Annun
50  IF Annun<>3 THEN GOTO 80
60  Dist=Datum/1000
70  GOTO 120
80  IF Annun<>6 THEN GOTO 110
90  Dir=INT (Datum/10)/1E4
100 GOTO 120
110 Zenang=INT (Datum/10)/1E4
120 DISP "Direction:"; Dir; "Distance:"; Dist; "Zenith Angle:"; Zenang
130 GOTO 40
140 END
```

The first three lines set the output format of the 38001A (HP-IB address 717). The rest of the program simply reads the data from the 38001A, determines whether the information is distance, direction, or

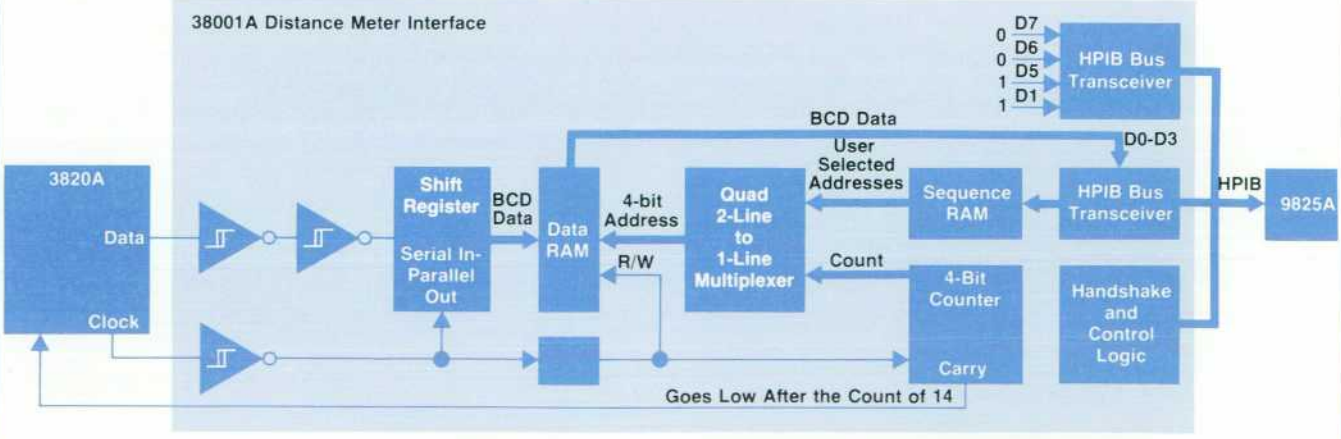

Fig. 2. *Block diagram of the electronics of the 38001A Distance Meter Interface.*

© Copr. 1949-1998 Hewlett-Packard Co.

zenith angle, and then displays the data on the CRT of the 9845B. The angles are assumed to be in units of grads.

The above process is not peculiar to the 3820A. The 38001A also translates data from the 3808A, 3810B, and 3850A distance meters to a form suitable for use on the HP-IB.

Gerald F. Wasinger

Jerry Wasinger received the BSEE degree from the University of Oklahoma at Norman in late 1977. He joined HP in early 1978 and has worked on the 3808A DM and the 38001A. Jerry is a native of Oklahoma City, Oklahoma. He and his wife live in Loveland, Colorado and are expecting their first child this fall. Outside of work and his studies for the MSEE degree at Colorado State University, Jerry enjoys bicycling, hiking, electronics, photography, and computer art—he was an art major before taking up engineering as a career.

$$X_p = \tfrac{1}{2} r \sin(\phi_t)\left(1 + \frac{\sin(\theta_2 - \theta_1)}{\sin(\theta_2 + \theta_1)}\right)$$

$$Y_p = r \sin(\phi_t)\left(\frac{\sin(\theta_2)\sin(\theta_1)}{\sin(\theta_2 + \theta_1)}\right) \qquad (2)$$

$$Z_p = r \sin(\phi_t)\left(\frac{\sin(\theta_2)\cot(\phi_1)}{\sin(\theta_2 + \theta_1)}\right)$$

Since r, θ_1, θ_2, ϕ_1, ϕ_2, and ϕ_t may all be measured without contact in a matter of seconds, X_p, Y_p, and Z_p may be determined almost instantaneously.

The preceding mathematics calculates a single solution for X_p, Y_p, Z_p. In actual practice, four angles—θ_1, θ_2, ϕ_1, and ϕ_2—are measured and used to calculate the three unknown points—X_p, Y_p, and Z_p—through a least-squares reduction. This reduction finds the best fit for the four knowns into the three unknowns. The least-square residual provides a convenient check on coordinate determination accuracy.

A 9845T Computer/Controller is recommended as the computer for the coordinate determination system. The 9845T was chosen on the basis of its large memory, ease of programming, and graphics capability. The computer communicates with the 3820A through the 38001A HP-IB Interface.

If it is unsatisfactory to have the 3820A at point A as the system origin or the horizontal projection of AB as the X axis, the 9845T may three-dimensionally rotate and translate the calculated coordinates. Thus complete coordinate system flexibility can be maintained. Even the baseline distance r need not be measured. If two control points exist the 9845T may inverse triangulate to define both the length and direction of r.

The 9845T also performs the functions of data transfer, angle averaging (in the event that additional sightings are made), coordinate calculation, graphics display of measured points, and operator prompting.

Error Analysis

In most dimensional measurement systems, there are three error-related items of interest—resolution, repeatability, and accuracy. For the 3820A-based coordinate-determination package, each quantity is first a function of geometry. The magnitude of this geometric influence varies with triangle strength (relative errors are greater for combinations of large and small values of θ_1 and θ_2).

System resolution referenced to the baseline distance is at least one part in 650,000 for most measurement applications. The figure of one part in 650,000 may be expressed as a dimension in the form of 1.5 μm per metre (18 μin per foot) of baseline. This figure assumes that the 3820A is outputting in the grads mode. If measurements are output in the degrees mode, resolution suffers by a factor of over three to become one part in 200,000.

Coordinate-determination repeatability is primarily a function of 3820A angle accuracy. Extracting partial derivatives of the least-square equations (equivalent to those presented in equation set (2)) yields error terms for X_p, Y_p, and Z_p as a function of each of the measured angles. Since most of the errors in measured angles are random variables, they may be squared, summed, and rooted to

Antenna Assembly

In the parabolic antenna industry, new techniques are constantly being sought to improve manufacturing ease and versatility. One problem is to design and certify lightweight antennas suitable for space applications. A technique recently developed uses thin aluminized-mylar films that are creatively shaped into a paraboloid. Because of the thin, delicate nature of the mylar film, dimensional measurements cannot be made by normal contact measurement procedures.

The 3820A Coordinate Determination System becomes a useful alternative measuring tool. Because the system is portable, it is brought to the antenna site instead of the opposite. The X, Y, and Z coordinates are measured to the surface without contact. The resulting coordinates are compared to an ideal parabolic surface for antenna profile accuracy determination. In this application, the scale factor of the baseline is not critical since the whole antenna may be scaled larger or smaller in size without affecting the parabolic calculations.

© Copr. 1949-1998 Hewlett-Packard Co.

A Deflection Measurement Example and Error Considerations

A short example may serve to clarify the usefulness of the 3820A Coordinate Determination System. Suppose we are to measure the bulges of the center of a metal tank before and after being filled with liquid (see Fig. 1). We select two instrument setups approximately 10 metres apart located in the same horizontal plane ($\phi_t = 90°$).

Measurements are made to P yielding:

$$\begin{aligned} \theta_1 &= 45° 19' 12'' \\ \theta_2 &= 46° 24' 18'' \\ r &= 9.929 \text{ m} \\ \phi_1 &= 91° 18' 01'' \\ \phi_2 &= 91° 19' 28'' \end{aligned} \quad (1)$$

The 9845T calculates coordinates for P in a matter of milliseconds:

$$(5.05855, 5.11537, -0.16330) \text{ metres} \quad (2)$$

If r is known to an accuracy of ± 0.005 m, θ_1 and θ_2 are known within 0° 00′ 02″ and ϕ_1 and ϕ_2 are known within 0° 00′ 04″ (3820A rms error specification), the absolute uncertainties of the coordinates for P due to the uncertainties in r, θ_1, θ_2, ϕ_1 and ϕ_2 are:

$$(\pm 0.00255, \pm 0.00258, \pm 0.00010) \text{ metres} \quad (3)$$

This is not an exceptionally precise determination of coordinates. However, since we are trying to determine the bulge in the tank, we are more concerned with the relationship of P-after to P-before.

After the tank is filled, the following measurements are made to P (P-after).

$$\begin{aligned} \theta_1 &= 45° 17' 14'' \\ \theta_2 &= 46° 22' 19'' \\ r &= 9.929 \text{ m} \\ \phi_1 &= 91° 18' 03'' \\ \phi_2 &= 91° 19' 30'' \end{aligned} \quad (4)$$

The new set of coordinates for P=P-after is

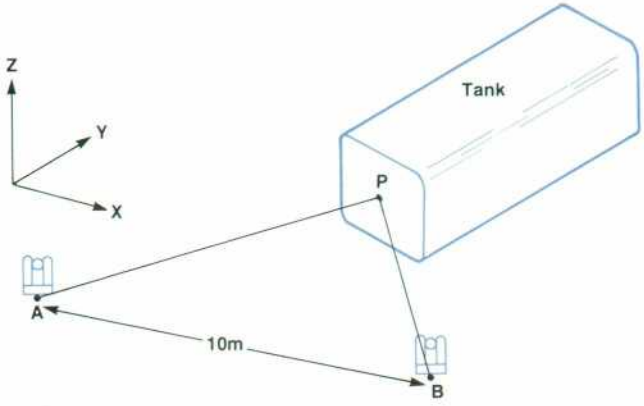

Fig. 1. *A small change in large object dimensions such as the bulge in a tank wall before and after being filled can be easily measured with the 3820A Coordinate Determination System.*

$$(5.05852, 5.10949, -0.16327) \text{ metres} \quad (5)$$

These coordinates also have absolute uncertainties of (3) above.

Since the measure of r is unchanged we may subtract the one set of coordinates from the other and get a much improved result. The difference is P-after minus P-before equal to

$$(-0.00003, 0.00588, 0.00003) \text{ metres}$$

with relative uncertainties of (using the rms error equations with r = 9.929 m)

$$(\pm 0.00006, \pm 0.00006, \pm 0.00010) \text{ metres}$$

Thus we can state that the bulge occurred in the Y direction with a magnitude of 5.88 ± 0.06 mm (0.231±0.002 in).

yield expected errors in coordinates. The magnitude of the partial derivatives varies with triangle strength as previously discussed.

The 3820A angle measurement system has a two arc-second horizontal rms error and a four arc-second vertical rms error when two sightings (one direct, one reverse) of an unknown point are taken. These angular errors are composed of sighting, 3820A circle, and 3820A geometric errors. Many of these errors are discussed elsewhere in this issue. However, when these angular error values are substituted into the partial-derivative equations for coordinate determination, extremely good results are obtained. For the triangle where $\theta_1 \approx \theta_2 \approx 45°$ and $\phi_1 \approx \phi_2 \approx \phi_t \approx 90°$ the rms error values for coordinate determination are:

E_x = 1:160,000 or 6.2 μm per metre (75 μin per foot) of r
E_y = 1:160,000 or 6.2 μm per metre (75 μin per foot) of r
E_z = 1:100,000 or 10 μm per metre (120 μin per foot) of r.

Once again, these values change as θ_1, θ_2, ϕ_1, ϕ_2 and ϕ_t vary.

Acknowledgments

Ken Frankel of Boeing Company and Bill Haight and Bob Hocken of National Bureau of Standards assisted in the preliminary understanding of the triangulation methodology, and Elton Bingham of HP verified the concepts for software development.

Douglas R. Johnson

Doug Johnson joined HP in 1978 after several years experience in semiconductor marketing and manufacturing. He is currently program manager for EDM instruments. Doug received the BSEE degree from Rensselaer Polytechnic institute in 1971 and the MBA from Arizona State University in 1975. A native of Rahway, New Jersey, he now lives in Fort Collins, Colorado. Doug enjoys skiing, sailing, hiking, jeeping, and backpacking. He is a member of the ski patrol and supports Junior Achievement. Recently, Doug and other HPites built a duplex at a ski resort using the 3820A to survey the land and stake out the construction.

© Copr. 1949-1998 Hewlett-Packard Co.

Automatic Measurements with a High-Performance Universal Counter

Built-in calculating capability, automatic measurement routines, innovative trigger level controls and interpolators, and an optional DVM add up to a powerful, versatile measurement system.

by Gary D. Sasaki and Ronald C. Jensen

HEWLETT-PACKARD'S first frequency counter, Model 524A, was a "new type of measuring instrument" that displayed the frequency of an unknown input "automatically." That was 30 years ago. Since then, counters have become fundamental, essential instruments with an ever-widening range of applications.

Lately, counter applications have increasingly called for more automatic measurement performance and convenience. For instance, in many digital circuits, such parameters as pulse width, duty cycle, and phase are significant. A conventional counter can be used to measure these parameters, but multiple setups are often needed, accompanied by manual calculation.

With this in mind, the new HP Model 5335A Universal Counter was designed. Now these and many other parameters can be measured automatically with the press of a key. Now with a single instrument it is possible to display frequency, period, time, volts, velocity, ratios, phase, events, rise time, slew rate, drift, and duty cycle.

Advanced Architecture

Behind these measurements stands a solid universal counter. Its basic frequency range is 200 MHz and it has 25-mV rms sensitivity. Single-shot time interval resolution is 2 ns. In the tradition of the HP Model 5328A,[1] an optional Channel C extends the frequency range to 1300 MHz, and an optional floating DVM measures voltage to ±1000 volts.

However, a look at the block diagram (Figure 2) reveals a counter far from the traditional vein. Two main blocks are the center of activity, the multiple-register counter (MRC) integrated circuit,[2] which performs all the basic counter functions, and the microprocessor system. All of the other blocks act as support. This centralized architecture gave the design team tremendous flexibility, and made possible some unusual capabilities.

For instance, function selection is directly controlled by the processor and only indirectly controlled by the keyboard. This means that the processor has the freedom to combine several measurements into one to arrive at more complex measurements.

Among the innovative sections of the counter are the trigger controls and the interpolators. These provide a number of features that make the counter easier to use by simplifying trigger setups and increasing resolution.

The block diagram also shows the use of matched A and B input amplifiers. This is important in assuring accurate

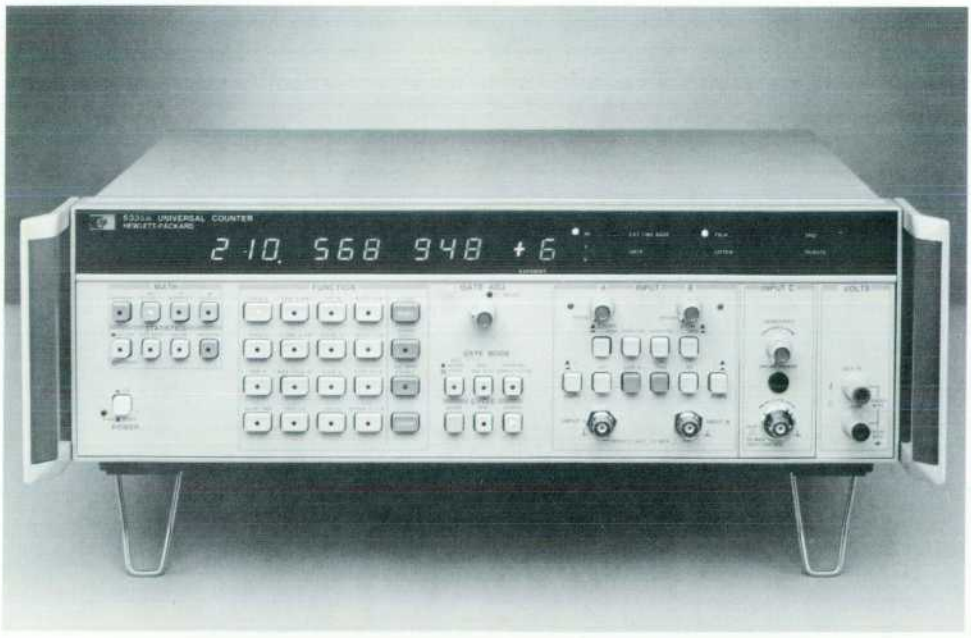

Fig. 1. *Model 5335A Universal Counter's outstanding abilities include 9-digit/second frequency and period measurement resolution, 2-ns single-shot time interval resolution, 200-MHz frequency range, 25-mV sensitivity, optional 1.3-GHz input channel, automatic pulse and phase measurements, manual or automatic triggering, versatile arming, math and statistics routines, voltmeter and oven oscillator options, HP-IB (standard), and low EMI.*

© Copr. 1949-1998 Hewlett-Packard Co.

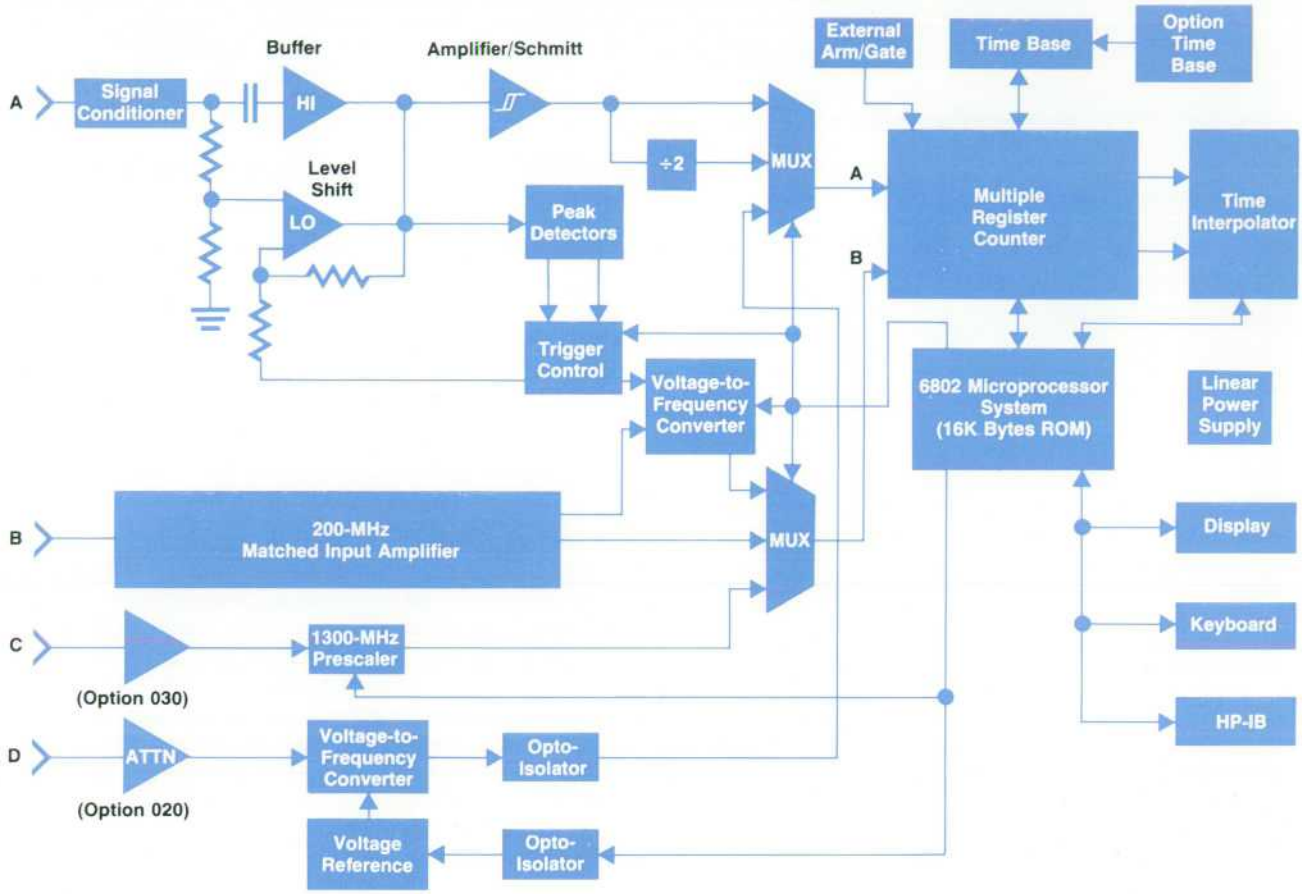

Fig. 2. *Advanced architecture of Model 5335A Universal Counter is based on two main integrated circuits—the multiple register counter and the microprocessor. All other blocks support these two.*

time interval measurements, particularly since time can be resolved down to 100 ps.

New Measurements

Directly accessible from the front panel are 16 measurement functions, and four additional functions are accessible via the HP-IB.* Some of these functions are new for a universal counter and take advantage of the flexibility that software control affords. One such function is duty cycle. Before, two measurements and a calculation were needed to measure the duty cycle of a signal. First, a pulse width measurement was made. Then, the period of the signal was measured. Knowing these two numbers, the duty cycle in percent could be calculated. This was generally more bother than it seemed to be worth, so the duty cycle was usually estimated visually on an oscilloscope.

Now, with the press of one key, DUTY CY, calculations are performed automatically. The user has the choice of displaying the percentage of time that the signal is at its high level or at its low level. The selection is made through the SLOPE A key.

Another new function for counters is slew rate, the change of voltage divided by the change in time. This is measured by combining the data from two other automatic functions in the counter, RISE/FALL TIME and TRIGGER LEVEL. Rise and fall time measurements are made by setting the counter's trigger levels to the 10% and 90% points of the signal using the automatic trigger setting circuits. A time interval measurement is made, and the data is stored in a temporary register. The two trigger levels are then measured. Finally, with these three pieces of data, the effective slew rate of the signal is calculated. All of the setups and calculations are done automatically. The user needs to press only one key.

Phase measurements are also possible. Several time interval measurements are combined to arrive at the answer. One method is to measure the period of each of the two signals and then measure the time interval between the two signals. Phase is calculated using this formula:

$$\text{Phase} = \frac{\text{TI}}{\text{PERIOD}} \times 360^\circ$$

This method, however, has a number of problems. For instance, trigger level settings have a tremendous effect on accuracy. Also, difficulties arise when measuring phase angles near 0°, because of limitations in time interval measurements near zero.

To solve these problems some new techniques were developed. First, the counter automatically sets the trigger levels to the 50% point of the signal to avoid operator error. Then, to further attenuate the effect of the trigger level

*The HP Interface Bus, compatible with IEEE 488-1978.

© Copr. 1949-1998 Hewlett-Packard Co.

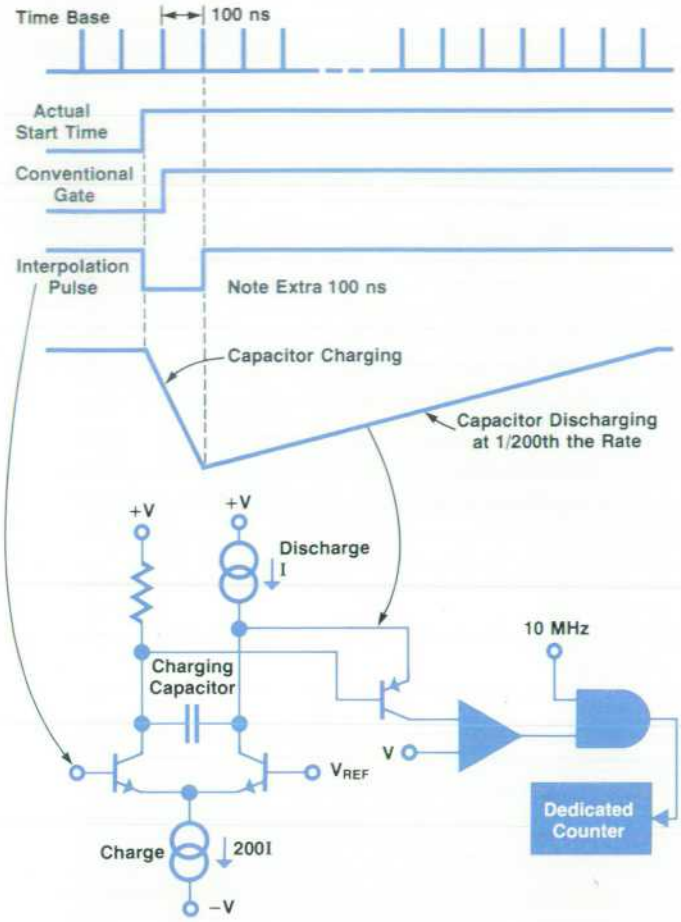

Fig. 3. *The 5335A achieves high resolution (near 1 ns) through interpolation. The time between the true opening of the gate and the conventional opening of the gate—plus 100 ns—is used to charge C_I. The capacitor is then discharged at about 1/200th of the charge rate to stretch the time interval so that it can be measured to high resolution by a conventional dedicated counter.*

setting and the effect of certain harmonics of the signal, phase is calculated using this new formula:

$$\text{Phase} = \frac{TI_1 + TI_2}{2 \times \text{PERIOD}} \times 360°$$

TI_1 is the time interval between the positive edges of the two signals and TI_2 is the time interval between the negative edges of the signals. This technique results in greater accuracy because the error in one time interval tends to cancel the other.

To eliminate problems around 0°, the counter automatically flips the slope of one of the channels when it detects that the phase is going to be close to 0°. This effectively converts the measured phase angle to around 180°, which is subsequently adjusted back to around 0° for display.

In all, at least five separate measurements are made for a phase measurement. These include measurements to assure that both signals are at the same frequency and within the requirements of the counter. To display the answer, a novel algorithm is used that prevents the usual confusion when the phase angle changes between 0° and 360°. This algorithm sets the display range to ±180° when displaying angles near zero, while setting the range to 0°-360° when displaying angles near 180°. This produces a clean, easy-to-follow display.

Interpolators

High resolution makes many measurements more practical. Most counters use a 10-MHz time base, which resolves time to only 100 ns. Some counters multiply the 10 MHz to 100 MHz to achieve 10-ns resolution. To get more resolution, averaging is used, but to reach even 1 ns with a 10-MHz time base, you need 10,000 samples. A jittered time base is needed to average properly, and some measurements such as pulse jitter are consequently not practical.

The 5335A achieves near 1-ns resolution through a technique called interpolation. It is an improved version of a similar technique used in the 5360A Counter.[3] An ordinary 10-MHz time base is used. Interpolator circuitry increases resolution by determining where in relation to the 100-ns time base pulses the counter's gate actually opens and closes. For instance, if the start of the gate is exactly between two 100-ns pulses, the interpolators will show that a 50-ns adjustment is needed.

The interpolators work by rapidly charging a capacitor for 100 ns plus the time between the gate's opening and the next time base pulse (Fig. 3). the capacitor is then discharged at a slower rate, roughly 1/200th the charge rate. The time it takes to discharge the capacitor is proportional to the charge time, and can easily be measured with a resolution of about one part in 100. Thus, the basic 100-ns resolution can be improved to near 1 ns.

100 ns is always added to the charge time because it is easier to make pulses that range from 100 ns to 200 ns than it is to make pulses of 0 ns to 100 ns. This fixed offset cancels out, as we will see later.

In practice, the current sources and other circuitry used to build the interpolators are subject to operational variations over temperature and time. The 5360A's interpolators were in a special insulated cavity and had several adjustments. The 5335A uses a self-calibration technique that is not affected by temperature and needs no adjustments.

Before each measurement the counter performs two preliminary calibration measurements. The first exercises the interpolators with a known 100-ns pulse. The second exercises them with a 200-ns pulse. Data collected from these two measurements is used in the equation below to calibrate the interpolators.

$$\text{Adjustment time needed for start of gate} = \frac{C_{START} - C_{100}}{C_{200} - C_{100}} \times 100 \text{ ns}$$

C_{100} and C_{200} represent the discharge time of the interpolator capacitor for the 100-ns and 200-ns calibration pulses, respectively. C_{START} represents 100 ns plus the time between the gate opening and the next time base pulse during the actual measurement. Notice how the 100-ns offsets in the pulses all cancel out. Using this method means that the only precision circuit needed is the time base itself.

A similar adjustment must also be made for the time the gate closes. The time between the beginning and end of the gate can be as small as a few nanoseconds, so a second

© Copr. 1949-1998 Hewlett-Packard Co.

Third Input Extends Range to 1300 MHz

by David M. DiPietro

Channel C, the optional third channel for the 5335A Universal Counter, is a 1300-MHz divide-by-twenty prescaler. The system block diagram is shown in Fig. 1. Signals applied externally to the channel C input pass through a special BNC connector containing a fast-acting fuse rated at 0.125 ampere.[1] The fuse blows when a signal outside the acceptable range of −5V to +5V is applied to the input. Thus, the user is relieved of any worry about damaging the prescaler module. Blown fuses can be replaced quickly from the outside.

Protection against damage to the sensitive amplifier is provided by a 600-mV (peak-to-peak) limiter composed of four diodes in a bridge configuration. The limiter prevents miscounts resulting from amplifier distortion under high input conditions. It permits input signals as high as 1Vrms. Sensitivity control is provided by a PIN diode attenuator just in front of the amplifier. Design of the attenuator is similar to an earlier design.[1] It offers a nominal range of 20 dB up to 1 GHz and 12 dB at 1.3 GHz. It preserves the input VSWR at less than 2.5:1 for any setting. The attenuator is adjusted by a control on the front panel.

The applied input signal is amplified by a custom hybrid integrated circuit manufactured by HP. It provides a gain of 24 dB ±1 dB from 2 MHz to 1600 MHz with a nominal 50-ohm input impedance. It dissipates only 400 mW and is housed in a small TO-12 style package.[2]

At the center of the prescaler design is the decade divider, which is a custom monolithic integrated circuit fabricated using HP's 5-GHz f_T process.[3] The decade divider has a sensitivity of better than −7 dBm over the frequency range of 150 to 1300 MHz, and its power consumption is 600 mW. It is integrated on a silicon chip measuring only 1.31 mm × 1.77 mm and is mounted in a 13-mm-diameter TO-8 metal package. The output of the decade divider is applied to a binary divider ahead of the 5335A's MRC circuit, so the overall prescale ratio is 20. However, resolution that is normally lost in a prescaler scheme is gained back with the help of the mainframe's interpolators.

Sensitivity of the decade is shown in Fig. 2, which is a plot of signal strength referred to the channel C input (50 Ω) versus input frequency. Within the shaded region the decade divider does not exhibit a stable division ratio. However, it can be seen from Fig. 2 that the decade is extremely sensitive in the vicinity of 1.0 GHz. This is a natural characteristic feature of frequency dividers that use direct-coupled master and slave latches in a feedback loop. With zero input signal the decade divider actually oscillates. The frequency of oscillation is preset to 1.0 GHz ± 10 MHz by adjusting a bias voltage. Other

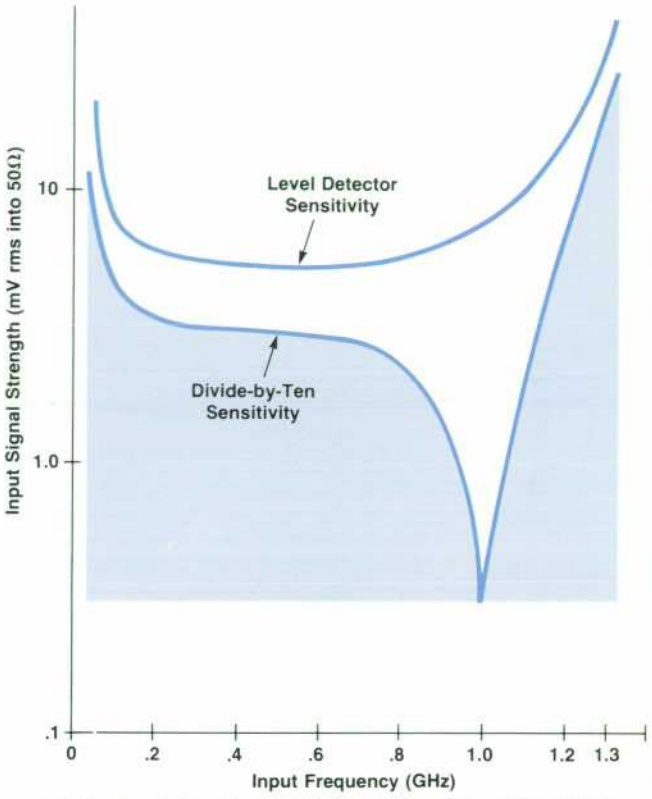

Fig. 2. *Level detector sensitivity as a function of frequency.*

characteristic features of oscillatory master-slave dividers are the rolloff of sensitivity at low frequencies to maintain the minimum input voltage slew rate required to avoid multiple counting, and rolloff at high frequencies because of the gain-bandwidth limitations of the fabrication technology.

Returning to the block diagram, Fig. 1, note that there are two auxiliary inputs to the binary divider. One of these is a clock enable

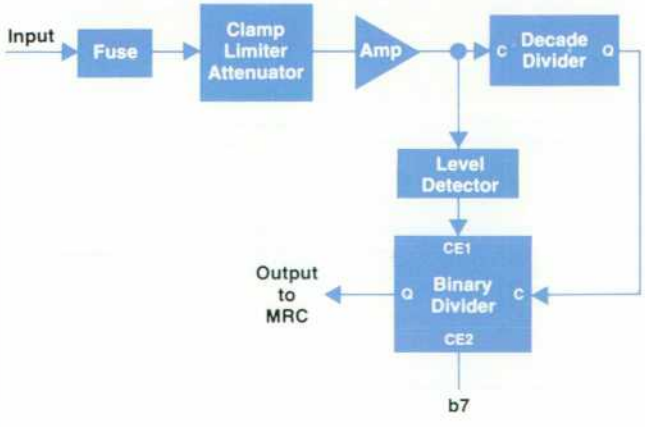

Fig. 1. *Block diagram of the 1.3-GHz prescaler system in the 5335A Counter's optional channel C.*

David M. DiPietro

Dave DiPietro has been doing integrated-circuit research and development for HP since 1973. Among his contributions is HP's 5-GHz bipolar process for high-speed monolithic ICs. Born in Endicott, New York, Dave received BS and M.Eng. degrees in electrical engineering from Cornell University in 1965 and 1966. After three years designing spacecraft electronics he resumed his electrical engineering studies at Stanford University, and received his PhD degree in 1975. As part of his PhD research he developed an implantable flowmeter for measuring blood velocity in the major arteries of the body. He has authored five papers on the flowmeter and the 5-GHz IC process. Dave lives in San Jose, California, enjoys tennis and skiing, and is interested in real estate.

© Copr. 1949-1998 Hewlett-Packard Co.

input (CE2) from the microprocessor. When bit b7 is high, as determined by the microprocessor control lines, the channel C output is enabled. When b7 is low, no signals can pass through the binary and channel C is disabled. Another clock enable input (CE1) effectively enables the binary whenever the level detector output is high. This condition corresponds to an input signal strength greater than a preset threshold level. The level detector consists of a bandpass filter with low-frequency rolloff at 100 MHz and high-frequency rolloff at 1000 MHz, followed by a peak detector and a Schmitt trigger. Hysteresis in channel C input sensitivity is provided by the Schmitt trigger. The instrument will start to count at an input level about 5% higher than needed to sustain counting. Fig. 2 shows the sensitivity of the level detector as a function of frequency. The level detector has been designed to be about 2 dB less sensitive than the divider to ensure unambiguous and crisp triggering from the channel C input.

Acknowledgments

The author recognizes the contributions of Hans Jekat to the input protection fuse and the PIN diode attenuator designs, and would like to thank David Chu for making helpful suggestions regarding diagnostic techniques.

References

1. H. Jekat, "A Portable 1100-MHz Frequency Counter," Hewlett-Packard Journal, April 1975.
2. H. Jekat, "A 400-to-1600-MHz ÷ 8 Prescaler," Hewlett-Packard Journal, April 1980.
3. D. M. DiPietro, "A 5-GHz f_T Monolithic IC Process for High-Speed Digital Circuits," International Solid-State Circuits Conference, 1975.

identical interpolator is used. At the end of the complete measurement the data from both interpolators is combined with the time measured using the conventional method of counting to form a result accurate to near 1 ns.

This high resolution benefits not only time interval measurements, but also other measurements, like frequency. Frequency is measured by counting the time it takes for a given number of input signal zero crossings to occur. To derive the input's frequency, the number of zero crossings, called events, is divided by the time. This is essentially the direct application of the definition:

$$\text{Frequency} = \text{Events}/\text{Time}$$

The resolution of the measurement is a function of the resolution of the two quantities, events and time. Time is always resolved to better than 2 parts in 10^9, and this same resolution is translated over to frequency measurements. Thus a frequency measurement taken over a one-second gate time yields nine digits of display. The traditional ±1 count uncertainty does not exist in this method because the number of events is always precisely known.

Since resolution is a function of the time base and not the input frequency, another benefit results. The input frequency can be prescaled without any loss of resolution! For instance, the 1.3-GHz input channel is prescaled by 20. Yet, a one-second gate time measurement of a 1-GHz signal still gives nine digits (least significant digit of 1 Hz). This is equivalent to making a direct count measurement.

LSI Counter

The gating, synchronizing and counting circuitry needed to perform these measurements is all within one custom LSI integrated circuit called the multiple-register counter. The MRC is a dedicated processor-compatible peripheral designed to perform all of the high-speed functions required in a universal counter. Built with emitter function logic and I^2L, over 4000 active elements provide the logic to control, count, and give the status of a wide variety of measurements. The MRC first appeared in the 5315A Universal Counter,[4] where much of its power was used, but not all. In the 5335A the full power of the MRC is used to maximum advantage.

For instance, the interpolation pulses required for high resolution are generated within the MRC. The same circuitry also generates the calibration signals. In addition, there is a built-in option to insert a fixed delay into the counter's stop channel, making possible the measuring of

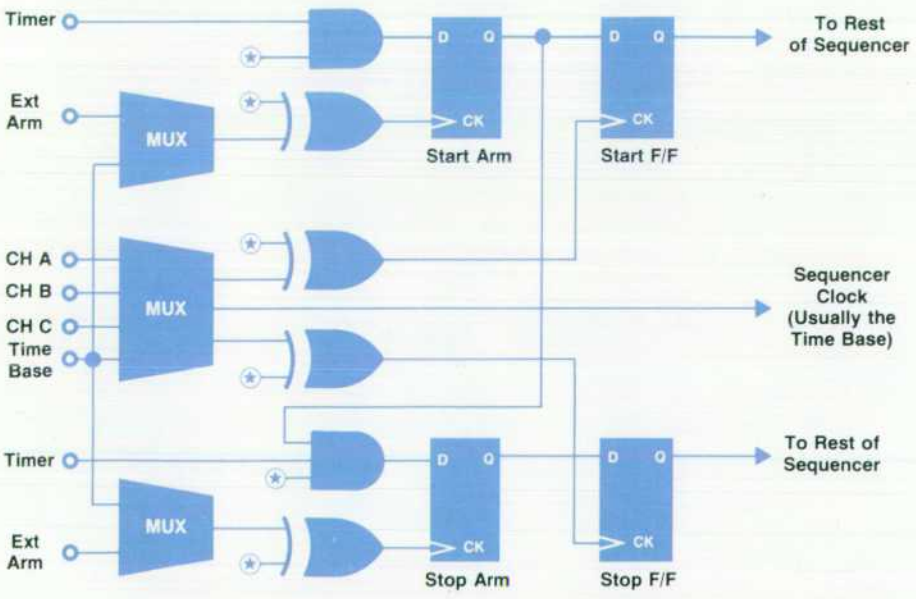

Fig. 4. *An elaborate synchronized gating circuit assures that 5335A measurements start and stop precisely as required. This is a simplified portion of the gate sequencer. The gate's start can be conditional on several signals. Exclusive-OR gates select the signal's slope. The ⋆ symbols represent control signals from the processor.*

© Copr. 1949-1998 Hewlett-Packard Co.

time intervals down to 0 ns, single shot. The delay is automatically taken into account during a special calibration procedure, yielding accurate time intervals in spite of time and temperature variations.

An elaborate synchronized gating circuit assures that the measurement starts and stops exactly when required. Provisions are made for arming the measurement in a number of different ways. Arming can be done by a TTL signal, an HP-IB command, automatically by the counter, or manually. A look at the simplified synchronizer circuit, Fig. 4, shows that a number of conditions must be met for the gate to open and close. The MRC's control register determines which condition must be met for any particular measurement. For example, the opening of the gate can be made conditional on a signal from channel A, channel B, or channel C, as well as on a number of other signals. Such flexibility means that a function like TIME INTERVAL B TO A is just as easy to do as TIME INTERVAL A TO B. The 5335A provides both of these functions at a cost of just a few bytes of program memory.

As mentioned, the ability to arm the measurement based on an external TTL signal is built in. Traditionally, this ability has been fairly restrictive, sometimes being limited to the arming of just the starting point. When the stopping point could also be armed, it was usually for time interval measurements only. With the MRC, none of these restrictions apply.

The ability to arm the start *and* the stop of almost *any* measurement is an inherent ability of the MRC. There are over a dozen arming combinations. Arming of the start and stop of a measurement can be done individually or together, and from either slope of the arming signal. Arming and gating can be internal or external. Such precise control over when the measurement is made makes it much easier to make such measurements as frequency shift keying (FSK) and pulse repetition frequency (PRF).

Another feature of the MRC lets its internal eight-decade count chains be expanded to any number of decades with the help of a processor. This feature is used to create a pair of count chains, each 20 decades long. With a 100-MHz signal, this chain would take more than 30,000 years to overflow. Consequently, the 5335A has no overflow annunciator, so gate times can be as short as 0 ns or as long as years.

Input Amplifiers

Good input amplifiers are essential to accurate measurements, so a lot of attention was given to making their operation as convenient as possible. For instance, the trigger level setting range is ±5 volts, about twice the range of previous counters. This means that a wider assortment of signals, such as TTL, can be handled without resorting to the use of attenuators.

The wide range is accomplished by using the well-known split-band amplifier scheme. As Fig. 5 shows, this circuit has a high-frequency, ac coupled FET buffer path in parallel with a low-frequency, dc coupled, operational amplifier path. The crossover is at around 30 kHz. The high-frequency path gives excellent 25-mV sensitivity to 200 MHz. The low-frequency path gives precise control over dc offsets. By changing the bias to the operational amplifier the entire signal can be raised or lowered.

The FET buffer has a gain of about 0.95 and is matched by the low-frequency path with resistors R1 and R2. The overall transfer function of the buffer is $V_o = (V_{in} - V_t)R1/R2$.

Unlike traditional counters, which move the trigger to the signal, this counter moves the signal to the trigger level. This lets the trigger point of the high-speed Schmitt trigger be a constant zero volts. The advantage is more accurate triggering because the Schmitt amplifier and its associated circuitry are always biased at a fixed point. Also, there are no difficult common-mode requirements on the Schmitt amplifier, thus making the ±5-volt trigger range practical.

A lot of attention also went into the design of the Schmitt trigger. HP's 5-GHz bipolar IC technology[5] was used to produce an adjustable-hysteresis Schmitt trigger circuit that operates at better than 500 MHz (Fig. 6).[6] Built into the design are connections for slope select and three-state trigger lamps. The IC was specifically designed for counter front ends.

The circuit consists of three main sections: an amplifier, a Schmitt trigger, and a pulse stretcher for the trigger lamps. The amplifier has three Gilbert current gain cells that are used for wide bandwidth. The geometry of each transistor was tailored to match the expected current loads. To do this, extensive computer-aided design was employed.

To adjust the hysteresis, the bias of the amplifier is changed to vary its gain. Hysteresis windows of nominally

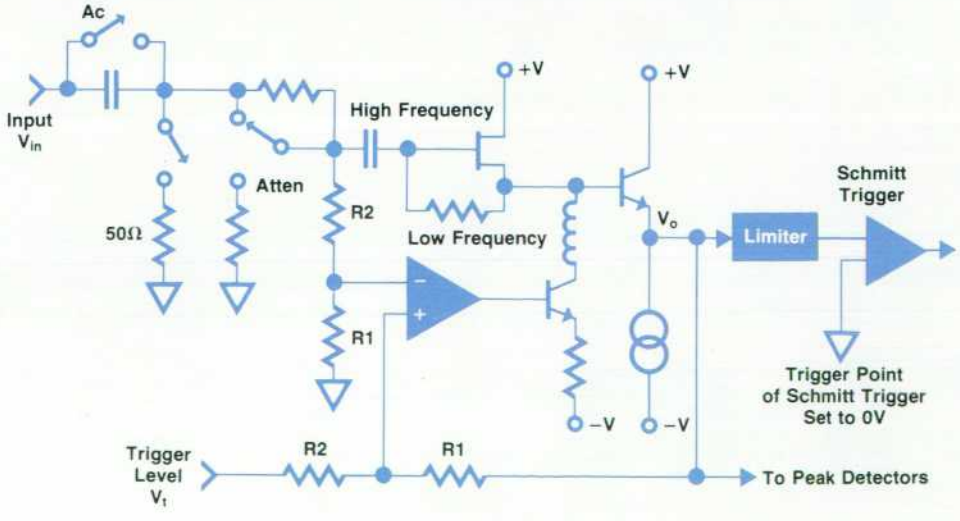

Fig. 5. *Split-band input amplifier moves the signal to the trigger level, thus keeping the high-speed Schmitt trigger's trigger point at a constant 0V.*

© Copr. 1949-1998 Hewlett-Packard Co.

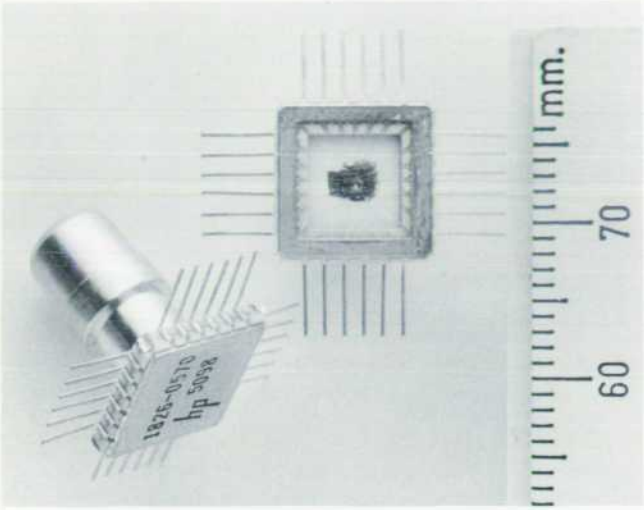

Fig. 6. *Special packaging aids the performance of the 500-MHz adjustable-hysteresis Schmitt trigger. The flat 24-pin package permits shorter leads than a dual in-line package, thereby aiding high-frequency operation. To keep the IC cool in spite of the large amount of power it dissipates, the IC is bonded to a plate attached to a stud, which is attached to a heat sink (not shown).*

20 to 100 mV can be realized. The trigger threshold can also be adjusted. This adjustment is used to compensate for any offsets the rest of the front end may have.

The extra bandwidth and adjustment flexibility mean a more consistent trigger circuit and thus more accurate measurements.

Automatic Triggering

One of the more spectacular features of the counter is its ability to set the trigger levels automatically. Three modes of automatic triggering are offered.

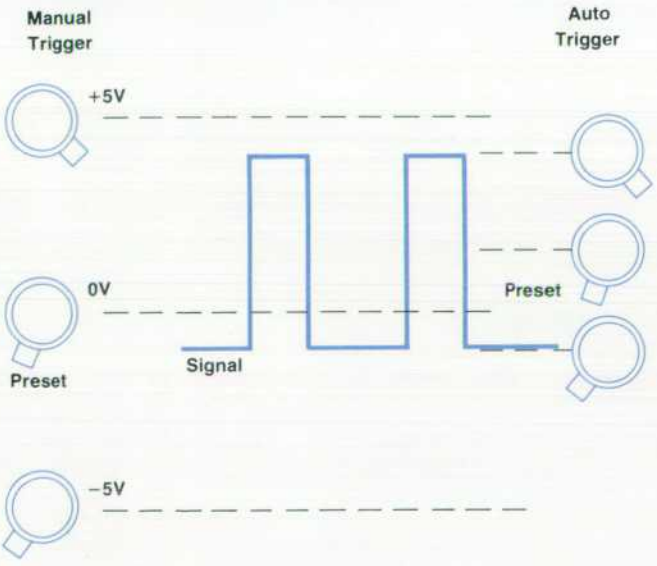

Fig. 7. *Comparison of manual and automatic trigger ranges. In manual triggering, the trigger level knob's adjustment range is −5V to +5V. PRESET is 0V. In automatic triggering, the peaks of the input signal determine the knob's adjustment range. PRESET is the 50% level.*

Auto preset sets the trigger level to the nominal 50% point of the input. For many applications this is all the user needs. This mode is invoked by pressing the AUTO TRIG key and turning the trigger level knob to PRESET. Once this is done the counter continuously tracks the signal, adjusting the levels as needed.

Auto adjustable triggering is enabled when the trigger level knob is turned out of PRESET. The peaks of the input are used to set the end points of the knob's adjustment range, so instead of a ±5V range, the range might be 0.4V to 3.5V if a TTL signal is being measured (Fig. 7). This mode gives much finer adjustment resolution, especially on smaller signals, and no other counter has it.

The third mode sets the trigger levels to the 10% and 90% points of the signal. This is used for automatically making RISE/FALL and SLEW RATE measurements. Since these measurements involve both the A and B channels, the COMMON A mode is automatically invoked.

Automatic trigger level adjustment is based on knowing the peak values of the input. Once these are known, a simple voltage divider or potentiometer can be used to get the 10%, 50%, and 90% levels.

To find the peaks, a dual peak detector circuit is used. Fig. 8 shows two almost identical detectors made with a basic diode-capacitor pair. One detector uses one diode for an output of $(V_{peak}-V_{diode})$, while the other detector uses two diodes for an output of $(V_{peak}-2V_{diode})$. These two levels are buffered and fed into a summing circuit that performs the following calculation:

$$(V_{peak}-2V_{diode})-(V_{peak}-V_{diode})=(V_{peak}-V_{diode})-V_{out}.$$

Thus $V_{peak}=V_{out}$.

Matched diodes are used, and because each diode sees the same signal the detector is relatively insensitive to variations in duty cycle and temperature. Also, since the only switching element is a Schottky diode the circuit is effective all the way up to 200 MHz.

For monitoring the trigger levels once they are set the counter provides three choices. Three-state trigger lights, first pioneered by the 5328A Counter, are now standard fare on a variety of HP counters. These give an instant indication of the status of the signal relative to the trigger levels. They act much like HP's logic probes. When the level is within the input the lamp flashes, but a steady on or off lamp indicates either improper triggering or lack of signal.

To measure the trigger level in volts, a built-in digital voltmeter (DVM) simultaneously displays both the A and B values at the press of a key. The cost of including this DVM is very small because a great deal of synergism is realized with the rest of the counter (see page 28). An inexpensive monolithic voltage-to-frequency converter and an analog switch are all that is needed. The power supply, voltage reference, control and counting circuits already exist.

The third choice of monitoring the levels is on an oscilloscope, using two rear-panel outputs. This method can be particularly useful if unusually shaped signals are being measured, since the trigger levels can be viewed along with the input signal.

Displaying the Answer

Once the measurement is made, it must be displayed. The

© Copr. 1949-1998 Hewlett-Packard Co.

A Voltmeter for a Universal Counter

by Val D. McOmber

The 5335A's microprocessor and the MRC it controls provide the capabilities of a true systems voltmeter for little additional hardware. Using precision voltage-to-frequency converters with software error correction as the conversion medium, all of the features of the 5335A's counting chain are brought to bear, including averaging, math, and statistics.

The counter has two DVM channels. One DVM is standard with the instrument. It is used for trigger level measurement and internal diagnostics. The other channel is reserved for Option 20, the "external" four-digit dc voltmeter. Operation of the internal DVM is basically the same as that of Option 20. The major differences are the accuracy of the references, linearity of the V-to-F converter, and the opto-isolators required in the four-digit optional DVM. The block diagram is shown in Fig. 1.

The four-digit dc voltmeter has three ranges: .0001 to 9.999V, 10.00 to 99.99V, and 100.0 to 1000V. Range selection is controlled by the microprocessor via a control circuit in the DVM that controls the switching in and out of the various feedback networks of the input amplifier/buffer. The amplifier has gains of −1/2, −1/20, and −1/200. This control of the gain makes the DVM fully autoranging.

The input buffer has a low-pass filter with a corner frequency at about 10 Hz for ac noise rejection. Because the gate for the DVM is continuously variable, 60/50-Hz noise is more noticeable than in DVMs that gate only at the line frequency. The variable gate, and thus the variable averaging available, provides the DVM with a broader spectrum of noise reduction capability than a fixed gate would. However, if in a particular application a coherent frequency (line or any other "low" frequency) contributes too much noise, this frequency or multiples of it may be applied to the counter's rear panel—at the EXTERNAL GATE port—to gate the DVM at the troublesome frequency. This will reduce the noise by some 20 to 30 dB.

Once the input voltage has been converted by the amplifier to a usable voltage range, it is converted to a frequency to be counted by the MRC. A monolithic V-to-F converter is used. Large errors in the V-to-F conversion process caused by temperature variations and drift have kept many designers from using V-to-F converters in other DVMs. These errors can easily be hundreds of parts per million per degree. Another major inconvenience is that many adjustments are often required just to get the transfer curve—no matter how linear—to go through the origin (sometimes called the zero adjust) and have the proper slope (or full-scale position, sometimes called the gain adjust). In the 5335A these errors are eliminated. The only errors left are the voltage reference and input ground shifts (in the input buffer).

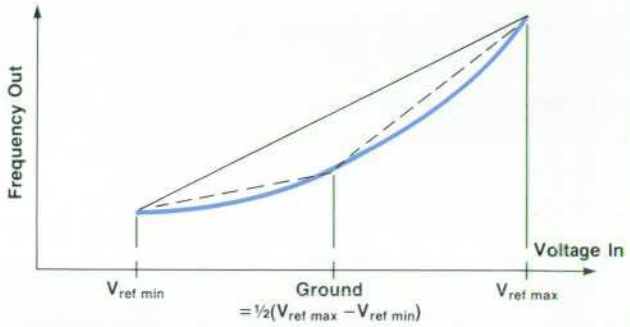

Fig. 2. *Typical voltage-to-frequency converter transfer functions are nonlinear. In the 5335A counter, the ends and midpoint of the transfer function are measured in a microprocessor calibration routine performed on each measurement. Then a two-segment linear approximation of the curve is used to reduce the conversion error.*

In addition to the errors normally encountered in lining up the zero and full-scale points of the transfer curve, another error results from the nonlinearity of the transfer from voltage to frequency. Fig. 2 shows a typical transfer function and this error. Even if the two end points are positioned exactly, there is still error caused by the curvature of the

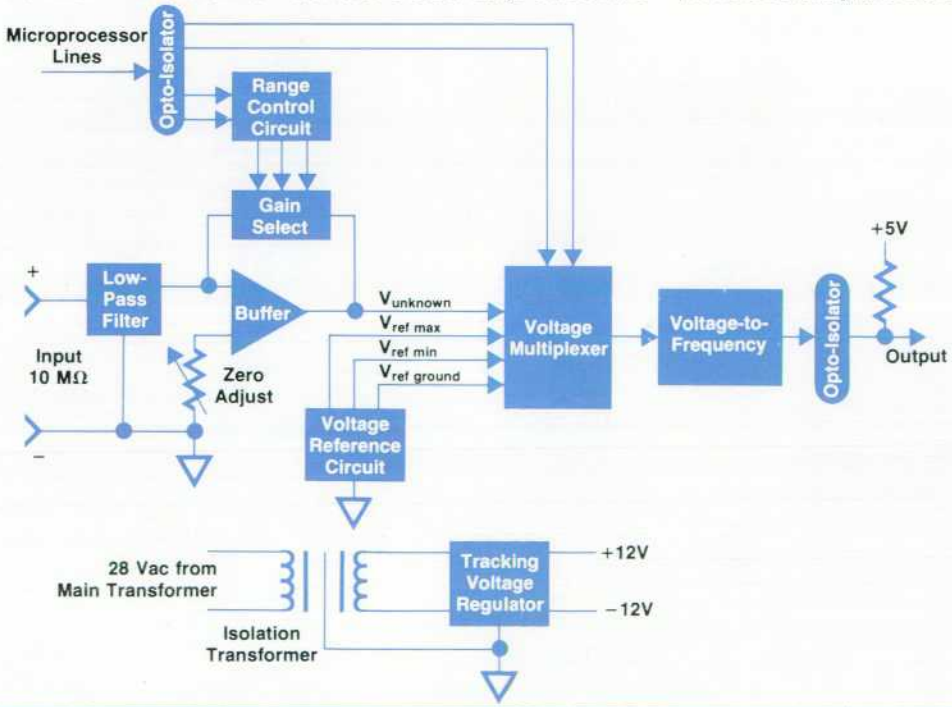

Fig. 1. *Block diagram of the digital voltmeter, Option 20, for the 5335A Universal Counter. The standard trigger-level DVM has the same form minus the input buffer.*

© Copr. 1949-1998 Hewlett-Packard Co.

transfer function. The distance between the desired straight line and the curved line is the conversion error. However, if a third point can be obtained on the V-to-F transfer curve so that two linear extrapolations (on the three points) can be done, the error can be dramatically reduced, as shown by the two dotted lines in Fig. 2.

This three-point two-line curve fit removes the problems of zero and gain adjust and drift with time and temperature in both the internal trigger level DVM and Option 20. It is implemented by microprocessor calibration, performed on each measurement. It is accomplished by providing, through a buffered voltage multiplexer, the three reference points needed for the linear curve fit. These voltage points are: the full scale maximum voltage of +5V, the minimum of −5V, and the midpoint, which is ground. These three references are provided by a precision voltage source that uses a commercial high-grade voltage reference which includes matched precision resistors for dual precision tracking references.

One particularly strong feature of the 5335A's DVM is that the user can take advantage of the features of the mainframe. Sample time can be adjusted for ease of viewing or accuracy. Math and statistics are available. External gating and HP-IB output round out the systems capabilities.

Val D. McOmber

Val McOmber holds BSEE and MSEE degrees from Brigham Young University. He joined HP and the 5335A Counter project in 1976, developing the counter's DVM, time base, power supply, front and rear panels, phase measurements, and EMC design. Now with HP's Santa Rosa, California Division, Val is married, has three children, and lives in Santa Rosa. His interests include photography, high-fidelity systems, racquetball, and his church and family. He's a native of Provo, Utah, and a captain in the U.S. Army Signal Corps reserve.

long string of digits that results from high resolution is broken into groups of three digits to make it easier to read. For short displays, however, this is not always desirable. This exception, and others, meant that using physically grouped digits was less than optimum. The solution was to group the digits by means of software, using the 12-digit display as if it were a blackboard, and positioning the numbers as needed. This approach gives the flexibility needed to display the wide variety of measurements available in the counter.

Another problem arises when the signal being measured is unstable. This can result in a display in which several of the least significant digits are meaningless. To avoid this problem, there is a key in the statistics group called SMOOTH. This activates an algorithm that monitors the display and truncates digits that are found to be too unstable. The monitoring is continuous, and if the signal being measured becomes more stable the algorithm increases the number of digits in the display.

The SMOOTH algorithm is fairly straightforward. Each new measurement is compared with the previous measurement to see how many digits agree. This information is fed into a running average that is eventually used to determine how many digits to display. A running average is used so that the number of digits will grow and shrink slowly to avoid an irritating jumpy display.

To further stabilize the display the measurement data is also fed into a running average. This has the effect of attenuating small glitches in the signal, while still indicating drift in the signal. A problem arises, however, if there is a large transition in the displayed value. The running average would distort the answer for too many readings. Therefore, the SMOOTH algorithm also checks for this occurrence and resets the average around the newest value.

To customize the display for particular applications the math keys can be used. These let the measurement be modified a number of ways, a good example being the display of drift. This is done by telling the counter to subtract from each new measurement the measurement immediately preceding it. For frequency measurements this has the effect of displaying df/dt. The setup is easy. The operator presses OFFSET = $MEAS_{t-1}$ ENTER, and given a sequence of measurements, $MEAS_1$, $MEAS_2$, $MEAS_3$, . . ., the counter will display $MEAS_t - MEAS_{t-1}$.

Analyzing the measurements through statistics is also possible. Arithmetic mean (average) can be used for measuring unstable inputs and for gaining an additional digit of resolution. Standard deviation can be used to measure the amount of instability in the signal. When combined with the math capability, a form of the two-sample Allan deviation can also be displayed. This is a measurement of frequency stability and requires the calculation of fractional standard deviation. The display can also be programmed remotely. In this mode the counter's display might show the results of external calculations done on measured data. Thus the counter appears to have made all the measurements and calculations itself. For example, a controller can program the counter to measure the frequency of a VCO (voltage-controlled oscillator) while varying the tuning

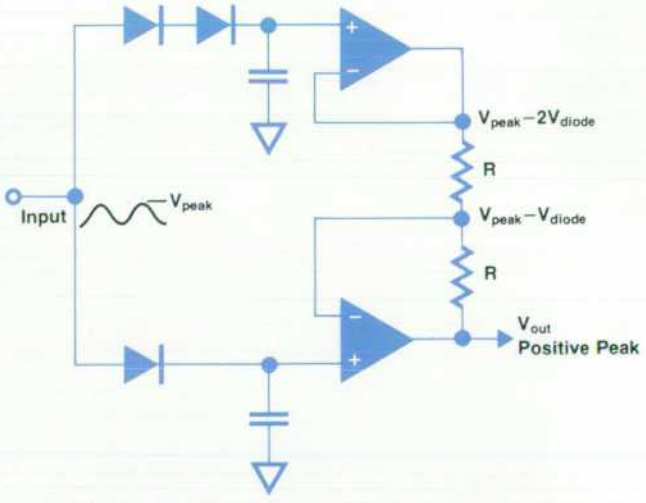

Fig. 8. *Simplified diagram of the self-compensating positive peak detector. The peaks of the input signal are detected and used to determine the 10%, 50%, and 90% levels for automatic triggering.*

© Copr. 1949-1998 Hewlett-Packard Co.

5335A Self Test and Diagnostics

by Robert J. LaFollette

The microprocessor that orchestrates the 5335A Universal Counter's complex measurements and chains of measurements is equally powerful and versatile in providing assistance to service and repair personnel. The 5335A provides three levels of self test. The first level is accessed by pressing the CHECK key for a moment. This initiates a slowly flashing display to check the seven-segment displays and the LED annunciators. A 13-step test of the multiple-register counter (MRC) and the interpolator circuitry is also performed.

Holding the CHECK key in for a few seconds accesses the second level of self test. In addition to the above checks, this test runs a complete check of the signal path in the counter. The operator must connect the TIME BASE OUTPUT on the rear panel to the FREQ A input to provide stimulus. Failure to do so will give an ERROR 7.0 message. With this stimulus, the program tests both input channels, the common/separate signal selection circuitry, input attenuators, ac/dc coupling, the routing to the MRC, MRC operation, the interpolation circuitry, the computation of the results, and the display and its circuitry.

The most complete set of tests and diagnostic tools is the third level. Over 30 tests or groups of tests can be performed. They are accessed through a sequence of keystrokes. Pressing one of the blue math keys such as OFFSET and then SMOOTH will produce the message SPECIAL, designating special function access. Pressing 99 ENTER completes the access into the diagnostics. Diagnostic #1, the entry point into the diagnostics, is the most thorough test of all. It is a chain of several tests that starts at the microprocessor and gradually works through the circuitry, adding blocks of circuits on each successive test. The reporting system issues a FAIL message for any unsuccessful test. The messages range from FAIL 1.0 to FAIL 7.5, with each integer indicating a different block of circuitry. The program attempts to cycle through the tests repeatedly even if several fail messages have occurred. The test checks ROM and RAM, MRC, interpolators, trigger level circuitry, displays, data bus, and front-end relays and circuitry. It concludes with a display of the +5-volt, −5-volt, and +3-volt supply voltages. Each of these tests and other specific tests can be accessed by entering the specific test number into the SCALE register.

Three forms of signature analysis can also be performed in both free run and stimulus mode. The free run mode takes no ROM space and checks the address decode logic and ROM patterns. Stimulus mode takes only 50 bytes of program code and tests the remainder of the addressable logic.

The 5335A's flat construction provides excellent serviceability, giving easy access to both sides of almost all components. The processor and digital sections disconnect easily from the power supply, the front end and the display assemblies for easy replacement or troubleshooting. Within the digital assembly a buffer is provided to isolate the heart components—the processor, the ROMs, and the RAM—from the rest of the digital circuitry, making fault location easier.

Robert J. LaFollette

Bob LaFollette received his BSEE degree in 1962 from California State Polytechnic University at San Luis Obispo. He did digital design for the next eleven years, generating one patent on a video data recording technique, then joined HP in 1973. He's done production engineering and software development, and is now a project manager with HP's Santa Clara Division. Born in Chicago, Illinois, Bob is married, has three children, and lives in Los Gatos, California. He's currently building a house of his own design in the Santa Cruz mountains and spends his leisure moments making photographs, hiking, and learning to play the five-string banjo.

voltage. The counter can then be made to display the VCO's linearity.

Systems

Several considerations go into the design of an instrument intended for system as well as bench-top applications. In systems, an important consideration is ease of programming. To meet this goal the command structure of the counter was designed to be totally compatible with HP's line of computers. No special format or image statements are needed, and parameters can be sent in any notation.

Another user convenience is seen every time the instrument is turned on. The HP-IB address is briefly displayed so that it can be verified by the operator.

Systems compatibility goes beyond the interfacing capabilities. Electromagnetic compatibility is also important. Therefore, signal paths within the instrument were carefully designed to reduce emissions. For instance, a linear power supply was chosen, not only for simplicity and ease of repair, but also for its quiet nature. Also important were precautions such as keeping signal loops and ground returns tightly spaced, and the fact that most of the high-speed logic was shrunk into the MRC. Most signals that have to travel long distances are converted to sine waves to reduce harmonics. The result is excellent EMI compatibility and the passing of both Germany's VDE 0871/0875 and FTZ 526/1979 and 527/1975 receiver law limits, and the U.S. MIL-STD-461A Notice 3 limits.

Acknowledgments

Designing and building a product involves the teamwork of a lot of people. Ken MacLeod led the project during its initial development and originated many important ideas. Dave DiPietro, Durwood Priebe, Ken Takemoto, Chuck Shinn, Saeed Haider, and Dan Hunsinger were the 5-GHz wizards. Bosco Wong and Bill Jackson designed the MRC. Carl Spalding did the clever mechanical design, with help from Jerry Curran. Kuni Masuda and Bob Blevin did the industrial design. Much guidance was provided by Ian Band, Jim Horner, and Ron Hyatt. Bruce Hanson, Rex Chappell, V. G. Morgan, Paul Stevenson, Paul Oliverio, Terry Mancilla, and many others produced the volumes of support literature in marketing. In production, where the real work is done, Joe Garibaldi and Steve Wu helped to make a smooth production introduction. They had the help of

© Copr. 1949-1998 Hewlett-Packard Co.

Ronald C. Jensen

Ron Jensen did the interpolator and front-end design of the 5335A Counter. Born in San Francisco, Ron served in the U.S. Navy as an electronic technician, then attended the University of California at Berkeley, graduating in 1951 with a BSEE degree. He's been with HP ever since, doing production test engineering and developing printers, accessories, and now counters. His work has resulted in one patent on a power failure indicator. Ron is married, has two grown children, and lives in Palo Alto, California. He enjoys outdoor activities and music.

Gary D. Sasaki

Gary Sasaki took over as 5335A project leader in 1977. He designed the counter's microprocessor and HP-IB systems, did some of the programming, and designed the production test system, triggering several patent applications along the way. He's now in product marketing, helping to introduce the 5335A. Gary received his BS degree in electrical engineering and computer science in 1973 from the University of California at Berkeley. With HP since 1973, he's served as project leader for the 5312A HP-IB Interface, as a member of the peninsula contributions committee, and as a member of the Micro-Mouse team that developed the second-prize-winning maze-running electromechanical mouse in a recent IEEE contest. He's a member of IEEE and has taught courses on microprocessors and programming. Gary was born in Oakland, California. He's married, lives in Cupertino, California, and describes himself as a woodworker, gardener, golfer, tennis player, GO player, and "frustrated artist." He's also a designer of computer games and advisor of a career-oriented Explorer Scout troop that meets at HP's Santa Clara Division.

Larry Ligon, Bill Spikes, Frans Waterlander, Roy Criswell, Bill Feeley, Kay Snyder, and Jim Feagin and the people of line 13.

In addition, there were many individuals from all departments to whom we extend our thanks for contributing their much appreciated efforts toward making the project a success.

References

1. J. F. Horner and B. S. Corya, "Modularity Means Maximum Effectiveness in Medium-Cost Universal Counter," Hewlett-Packard Journal, July 1975.
2. B. W. Wong and W. D. Jackson, "A High-Performance Bipolar LSI Counter Chip Using EFL and I^2L Circuits," Hewlett-Packard Journal, January 1979.
3. G. A. Reeser, "An Electronic Counter for the 1970's," Hewlett-Packard Journal, May 1969.
4. L. W. Masters, K. M. Blankenship, and M. J. Ward, "A Low-Cost, Microprocessor-Based 100-MHz Universal Counter," Hewlett-Packard Journal, January 1979.
5. D. M. DiPietro, "A 5-GHz f_T Monolithic Integrated Circuit Process for High-Speed Digital Circuits," International Solid State Circuits Conference, 1975.
6. C.E. Shinn II, "Wideband Dc-Coupled Amplifier/Schmitt," International Solid State Circuits Conference, 1977.

ABRIDGED SPECIFICATIONS

HP Model 5335A Universal Counter

INPUT CHARACTERISTICS (CHANNEL A AND B)
RANGE: dc coupled: 0 to 100 MHz.
ac coupled: 1 MΩ, 30 Hz to 100 MHz.
50Ω, 200 kHz to 100 MHz.
Channel A range is 200 MHz when in Frequency A and Ratio modes.
SENSITIVITY: 25 mV rms sinewave to 200 MHz.
75 mV peak-to-peak at minimum pulse width of 5 ns.
DYNAMIC RANGE: 75 mV to 5V peak-to-peak to 100 MHz.
75 mV to 2.5 V peak-to-peak >100 MHz.
SIGNAL OPERATING RANGE: −5Vdc to +5Vdc.

TRIGGER LEVEL SETTABILITY:
AUTO TRIGGER OFF:
PRESET: set to 0Vdc nominal.
ADJUSTMENT RANGE: −5Vdc to +5Vdc.
AUTO TRIGGER ON:
PRESET: set to 50% level of input nominal.
ADJUSTMENT RANGE: negative peak level to positive peak level of input nominal.

AUTO TRIGGER:
RANGE: 1 MΩ, 30 Hz to 200 MHz at 50% duty cycle.
50Ω, ac coupled, 200 kHz to 200 MHz.
DUTY CYCLE: 10% to 90%.
Single shot measurements should not be made with Auto Trigger on.

FREQUENCY A
RANGE: 0 to 200 MHz, prescaled by 2.
LSD DISPLAYED: $\frac{1\text{ ns}}{\text{Gate Time}} \times$ FREQ. (9 digits/s)

PERIOD A
RANGE: 10 ns to 1×10^7 s.
LSD DISPLAYED: $\frac{1\text{ ns}}{\text{Gate Time}} \times$ PER. (9 digits/s)

TIME INTERVAL A TO B
RANGE: 0 ns to 1×10^7 s.
LSD DISPLAYED: 1 ns.

TIME INTERVAL DELAY: Front panel gate adjust knob inserts a variable delay of nominally 100 μs to 4 s between START (Channel A) and enabling of STOP (Channel B).

TOTALIZE A
RANGE: 0 to 100 MHz, 0 to 1×10^{12} counts.
MANUAL: totalized when gate is opened via manual gate mode key.
GATED: totalized during gate time which may be internally or externally set.

RATIO A/B
RANGE: Channel A, to 200 MHz. Channel B, to 100 MHz.

INVERSE TIME INTERVAL A TO B: Performs a time interval A to B measurement and inverts it.

PULSE WIDTH A: Measures the width of a pulse at the trigger point set via the trigger level controls. SLOPE A selects polarity of pulse.
RANGE: 5 ns to 1×10^7 s.

RISE AND FALL TIME A: Measurements taken from 10% point to 90% point.
SLOPE A switch determines whether rise or fall measurement made.
RANGE: 20 ns to 10 ms.
PULSE HEIGHT: 500 mV to 5V, peak-to-peak.

SLEW RATE A: Measurements are of effective slew rate between 10% point to 90% point of waveform, displayed in volts/s.

DUTY CYCLE A: Displays percentage of time the signal is high when SLOPE A is positive and percentage low when SLOPE A is negative.

GATE TIME: Displays the gate time setting or time interval delay setting. Time displayed and actual gate time may differ due to synchronization with the period of input signal.
LSD DISPLAYED: up to three digits displayed with Ext. Arm Enable OFF. 100 ns with Ext. Arm Enable ON.

TRIGGER LEVEL: Displays Channel A's and Channel B's trigger levels simultaneously for function currently in use.
LSD DISPLAYED: 10 mV.

PHASE A TO B: Measures the phase of Channel A input relative to Channel B input and displays in degrees. Auto Trigger and Preset on at all times.
RANGE: −180° to +360°, range hold OFF; 0° to +360°.
Range Hold ON: 1 MHz max. frequency.
LSD DISPLAYED: 0.1°.

MATH: Any measurement result can be mathematically modified for display in more convenient units. Offset, Normalize, and Scale may be used independently or together as follows:

$$\text{Display} = \frac{\text{Measurement} + \text{Offset}}{\text{Normalize}} \times \text{Scale}.$$

Numbers are entered via the blue labeled keys. DISABLE key will toggle off and on all selectable math keys.
LAST DISPLAY: Causes the value of the previous display to Offset, Normalize, or Scale all subsequent measurements.
MEASUREMENT 1-1: Causes each new measurement to be subtracted from each immediately preceding measurement.

STATISTICS
SAMPLE SIZE: Selectable between N = 100 and N = 1000 samples.
STANDARD DEVIATION: Displays a standard deviation of selected sample size.
MEAN: Displays the mean estimate of selected sample size.
SMOOTH: Performs a running weighted average and truncates unstable least significant digits from the display.

PROGRAMMING
PROGRAMMABLE CONTROLS: all measurement functions, Math, Statistics, Reset, Range Hold, Check, Gate Adj., Remote Gate, Gate Mode, Cycle, Slope, Preset, Common A, Auto Trigger, Ext. Arm Slope/Enable, Learn Mode, Remote Display.

General

GATE
ADJUSTABLE: 100 μs to 20 ms and 20 ms to 4 s nominal.
MINIMUM: minimum gate time. Actual time depends on function.
MANUAL: opens and closes gate manually.

CYCLE: determines delay between measurements.
NORMAL: no more than 4 readings per second nominal.
MINIMUM: updates display as rapidly as possible.
SINGLE: one measurement taken with each press of button.

TRIGGER LEVEL OUT: dc level at rear BNC connectors.

EXTERNAL GATE OUT: signal goes low when gate is open.

ARMING: depressing the front panel Ext. Arm Enable key allows the START and/or STOP points of a measurement to be armed by either slope of a rear panel TTL input signal. External Gate measurement defined by both START and STOP armed.

RANGE HOLD: freezes decimal point and exponent of display.

RESET: when pressed, starts a new measurement cycle.

CHECK: performs an internal self test and lamp test.

DISPLAY: 12 digit LED display in engineering format.

POWER REQUIREMENTS: 100, 120, 220, 240 Vac (+5%, −10%), 48-66 Hz; 130 VA max.

TIME BASE:
FREQUENCY: 10 MHz.
AGING RATE: $<3 \times 10^{-7}$/month.
TEMPERATURE: $<2.5 \times 10^{-6}$, 0 to 50°C.

OPTIONS
Opt-010: Oven Oscillator
FREQUENCY: 10 MHz.
AGING RATE: $<5 \times 10^{-10}$/day after 24-hr warmup.
TEMPERATURE: $<7 \times 10^{-9}$, 0 to 50°C.
WARM-UP: within 5×10^{-9} of final value in 20 min.
OPT. 020: dc Digital Voltmeter
RANGE: autoranging, autopolarity, ±10, ±100, ±1000V ranges.
SENSITIVITY: 100 μV to 100 mV depending on range.
LSD DISPLAYED: same as sensitivity (up to 4 digits).
Opt. 030: C Channel
INPUT CHARACTERISTICS
RANGE: 150 MHz to 1.3 GHz.
SENSITIVITY: 10 mV rms, 150 MHz to 1 GHz.
100 mV rms, 1 to 1.3 GHz.
FUNCTIONS: Frequency C and Ratio C/A.

PRICES IN U.S.A.: 5335A Universal Counter, $2950. Opt. 010 Oven Oscillator, add $650. Opt. 020 DVM, add $275. Opt. 030 C Channel, add $450. 5316A Universal Counter, $1500.

MANUFACTURING DIVISION: SANTA CLARA DIVISION
5301 Stevens Creek Boulevard
Santa Clara, California 95050 U.S.A.

© Copr. 1949-1998 Hewlett-Packard Co.

A Low-Cost Universal Counter for Systems Applications

Since the introduction of the HP-IB (Hewlett-Packard's implementation of the IEEE-488 interface standard) it has become much easier to design automatic test systems. A basic element of many automatic systems is a universal counter, which measures frequencies, time, and events in a myriad of different ways.

A new low-cost, low-power, reliable universal counter for systems applications that combines excellent performance with remote programmability is the new Model 5316A (Fig. 1). Its performance specifications are, in general, the same as the comparable specifications for the 5315A/B.[1] There are a number of new features, but the primary difference is the ability to communicate on the HP-IB.

The dc level at which the counter triggers is generally determined by a pair of potentiometers on the front panel. In the 5316A, these levels can also be independently programmed through digital-to-analog converters (DACs) over a range of +2.50 volts to −2.50 volts in 10-millivolt increments. The trigger levels are brought out to two points on the front panel. These test points allow access to the actual trigger levels whether they are under local or HP-IB control.

A useful feature in systems applications is the ability to lock the internal reference oscillator to a local standard. Any submultiple of 10 MHz between 1.0 MHz and 10 MHz can be used with the 5316A. An injection-locked multiplier produces the 10-MHz time base used by the internal counting chain.

A single-chip microcomputer consists of a central processing unit (CPU), ROM, and RAM on a single monolithic IC. The 5316A is unusual in that it uses two different microcomputers: a 3870 to implement the normal counting functions such as scanning the keyboard, driving the display and operating the counting chain, and a 6801 to process the I/O such as decoding the HP-IB instructions and encoding the data into ASCII. The two processors exchange information by a four-bit link with an asynchronous handshake.

Each processor has two kilobytes of ROM; the software residing in the ROMs defines the operation of the 5316A. Software initialization includes ROM and RAM testing internal to the I/O processor, and external testing of the four-bit data link between the I/O processor and counter processor. The I/O processor programs the counter processor for self check and reads the data. If an error develops, the user is informed by the flashing of the HP-IB status lamps. This provides maximum user confidence and a convenient troubleshooting tool if the instrument should require service. The 5316A HP-IB instructions and programming format are designed to be as similar as possible to those of the higher-performance 5335A, described elsewhere in this issue.

A number of self-test routines are built into the 5316A. These include signature analysis and a thorough test of the link between the I/O processor and the HP-IB controller. The signature analysis routine includes a DAC programming routine that generates a sawtooth waveform that can be monitored at the trigger level test points on the front panel. The HP-IB link test is an extensive interactive test of the link between the HP-IB controller and I/O processor; it ensures correct operation of all the elements of the HP-IB interconnection, including the cable. Twenty-five percent of the ROM is devoted solely to testing. The test routines use many of the subroutines in the main operating systems, so that the actual percentage of the software used in testing is sixty-five percent.

Fig.1

One of the extraordinary features of the 5316A is its low power consumption. Low-power design reduces the internal heat rise, thereby greatly improving reliability. The 5316A is one of the few systems-oriented instruments that does not need a fan.

Reference

1. L.W. Masters, K.M. Blankenship, and M.J. Ward, "A Low-Cost, Microprocessor-Based, 100-MHz Universal Counter," Hewlett-Packard Journal, January 1979.

-Michael J. Ward
-David M. George

Address Correction Requested
Hewlett-Packard Company, 1501 Page Mill Road, Palo Alto, California 94304

Bulk Rate
U.S. Postage
Paid
Hewlett-Packard Company

HEWLETT-PACKARD JOURNAL

SEPTEMBER 1980 Volume 31 • Number 9

Technical Information from the Laboratories of Hewlett-Packard Company

Hewlett-Packard Company, 1501 Page Mill Road
Palo Alto, California 94304 U.S.A.
Hewlett-Packard Central Mailing Department
Van Heuven Goedhartlaan 121
1180 AM Amstelveen The Netherlands
Yokogawa-Hewlett-Packard Ltd., Suginami-Ku
Tokyo 168 Japan

02000208106&&&BLAC&CA00
MR C A BLACKBURN
JOHN HOPKINS UNIV
APPLIED PHYSICS LAB
JOHNS HOPKINS RD
LAUREL MD 20810

CHANGE OF ADDRESS: To change your address or delete your name from our mailing list please send us your old address label. Send changes to Hewlett-Packard Journal, 1501 Page Mill Road, Palo Alto, California 94304 U.S.A. Allow 60 days.

© Copr. 1949-1998 Hewlett-Packard Co.